Comparison of Nine level and Eleven level Inverter for Induction Motor Drives

Ankita Srivastava
Assistant Professor
Department of Electrical & Electronics Engineering,
New Horizon College of Engineering,
Bangalore, Karnataka,India.

Jyothi.D
Assistant Professor
Department of Electrical & Electronics Engineering,
New Horizon College of Engineering,
Bangalore, Karnataka,India.

Prtima Gakhar
Assistant Professor
Department of Electrical & Electronics Engineering,
New Horizon College of Engineering,
Bangalore, Karnataka,India.

Abstract— Multi-level inverter technology has emerged recently as a very important alternative in the area of high-power medium-voltage energy control. However, output current of the inverter as well as the time duration of the redundant switching states have been neglected. Moreover the advantages like high quality power output, low switching losses, low electro-magnetic interference (EMI) and high output voltage made multilevel inverter as a powerful solution in converter topology. In this project, the impacts of connected load to the cascaded H-bridge converter as well as the switching angles on the voltage regulation of the capacitors are studied. This study proves that voltage regulation is only attainable in a much limited operating conditions that it was originally reported. At large multilevel inverters are classified into diode clamped, flying capacitor, and cascaded H-bridge. Among those types CHBMLI offers enhanced output voltage waveform with lesser THD when increasing the levels of inverter. in addition to that the preferred output values are controlled by modulating the width of the pulses by Pulse Width Modulation(PWM) technique. The results reveal that the CHBMLI is more appropriate for induction motor drive. The proposed topology developed by using Matlab/simulink software.

Key words: CHBMLI, Multi carrier PWM, THD, induction motor drive.

I. INTRODUCTION

Multilevel inverters include an array of power semiconductors and capacitor voltage sources, the output of which generate voltages with stepped waveforms. The commutation of the switches permits the addition of the capacitor voltages, which reach high voltage at the output, while the power semiconductors must withstand only reduced voltages [1],[2],[3]. Fig. 1 shows a schematic diagram of one phase leg of inverters with different numbers of levels, for which the action of the power semiconductors is represented by an ideal switch with several positions. A two-level inverter generates an output voltage with two values (levels) with respect to the negative terminal of the capacitor Fig. 1(a), while the three-level inverter generates three voltages, and so on. Most prominent among them are high efficiency and high power density due to the absence of field winding, in addition the absence of brushes leads to high reliability, low maintenance and high
capability. However in a practical BLDC drive, significant torque pulsations may arise due to the back emf waveform departing from the ideal. as well as commutation torque ripple, pulse width modulation (PWM) switching. Torque ripple due to the current commutation is caused by the mismatches between the applied electromotive force and the phase currents with the motor electrical dynamics. By increasing the number of levels in the inverter, the output voltages have more steps generating a staircase waveform, which has a reduced harmonic distortion [4], [5].Nowadays researchers are trying to reduce the torque ripple and harmonic component in the motor. An active topology to reduce the torque ripple is synchronous motor presented in [1]. This paper discusses the hysteresis voltage control method. The torque ripple is minimized using PWM switching is presented in paper [2], this scheme has been implemented using a PIC microcontroller to generate modified pulse width modulation (PWM) signals for driving power inverter bridge. However, a high number of levels increases the control complexity and introduces voltage imbalance problems. Three different topologies have been proposed for multilevel inverters: diode-clamped or neutral point clamped, flying capacitors clamped and cascaded multi cell with separate dc sources. In addition, several modulation and control strategies have

been developed or adopted for multilevel inverters including the following: multilevel sinusoidal pulse width modulation (SPWM).

A multilevel converter has several advantages over a conventional two-level converter that uses high switching frequency pulse width modulation (PWM) [6],[7],[8].The attractive features of a multilevel converter are, (a) *Staircase waveform quality:* Multilevel converters not only can generate the output voltages with very low distortion, but also can reduce the dv/dt stresses; therefore electromagnetic compatibility (EMC) problems can be reduced.*(b) Common-mode (CM) voltage:* Multilevel converters produce smaller CM voltage; therefore, the stress in the bearings of a motor connected to a multilevel motor drive can be reduced. (c) *Input current:* Multilevel converters can draw input current with low distortion. (d) *Switching frequency:* Multilevel converters can operate at both fundamental switching frequency and high switching frequency PWM. It should be noted that lower switching frequency usually means lower switching loss and higher efficiency. There are different approaches for the selection of switching techniques for the multilevel inverters. Induction motors are the workhorses in industries. In order to provide a wide range of control a suitable power converter is required in the drive system for that cascade inverters are more suitable. As stator voltage of CHBMLI is fed to the motor output range of current is nearly sinusoidal. Also while the motor run in charge mode or drive mode the charge unbalance problem will not occur. In this paper comparative analysis of five-level and nine-level CHBMLI with the induction motor drive performance are validated.

II .CASCADED H-BRIDGE MULTILEVEL INVERTER

The arrangement of CHB-MLI is very simple. Like the diode clamped and flying capacitor MLI, the requirement of clamping diodes and capacitors are not needed for CHBMLI. This gives quite flexibility when extending it to various levels.

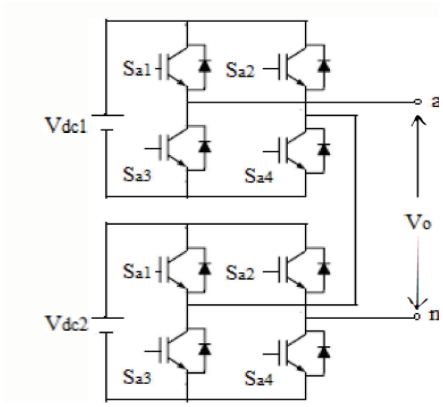

Fig.1 Single phase leg five-level cascaded inverter.

Fig.1 shows the single phase leg structure of five-level cascaded inverter. Here each full bridge inverter produces different output voltages which are +Vdc, 0, -Vdc through various arrangement of four switches Sa I, Sa2, Sa3 and Sa4.To get +Vdc, Sal and Sa4 are turned on, where -Vdc can be acquired by turning on Sa2 and Sa3.When turning on all the switches output voltage gives O. The output phase voltage levels are given by m=2N+ 1, where 'N' is the number of dc sources and 'm' gives number of levels.

A. Operation of nine-level cascaded H Bridge MLI fed induction motor drive:

The three phase induction motors are the frequently encountered machines in industry because of its simple design, rugged and easy maintenance. The frequency of induction motor is proportional to the synchronous speed. The rotating magnetic flux produced by three phase currents rotates with a constant speed where the supply frequency of the drive is proportional to synchronous speed. Hence the rotating flux and rotor current generate a force that drives the motor and accordingly torque will develop. For CHBMLI fed induction motor drive the inverter setup is based on series connection of single phase inverters with separate dc sources. The level shifted multi-carrier PWM principle is applied to CHBMLI where it uses many triangular carrier signals and one modulating signal. Fig.2 shows the PWM generation. In this the pulse pattern depends on the ratio of modulating V control to the peak carrier voltage Vtri referred as modulation index (Ma).

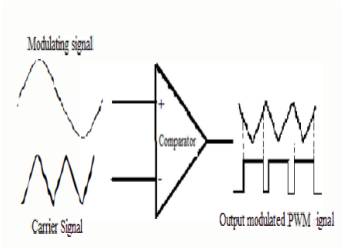

Fig. 2 PWM generation

The peak value of V control controls the amplitude and the frequency of V control controls the fundamental frequency. Fig.3 shows three-phase induction motor fed by nine level cascade inverter where the sub system for pulse generator have eight number of carrier signals. Four of them are applied across the positive half of the modulating signal duty cycle, remaining four is applied across the negative half of the modulating signal duty cycle. So 16 PWM signals are generated and then given to the sixteen switches of a leg. Similarly the pulses are generated for remaining phases. To get balanced three phase output modulation signal is phase shifted by 1200 .Through inverter switching state line to ground voltage get easily controlled.

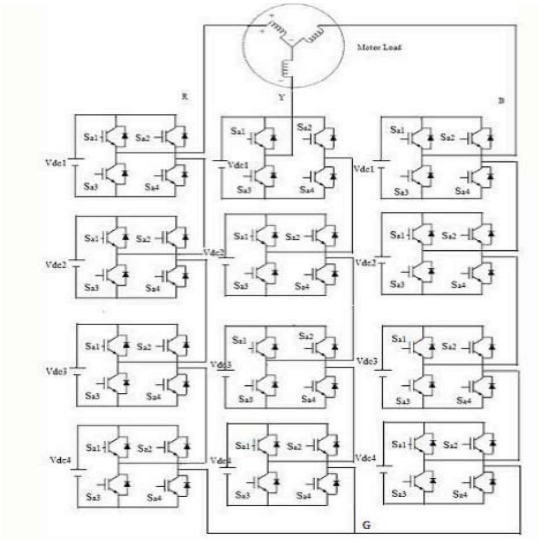

Fig. 3 Three phase induction motor fed by nine- level cascade inverter

III. INDUCTION MOTOR

The AC induction motor is a rotating electric machine designed to operate from a 3-phase source of alternating voltage. For variable speed drives, the source is normally an inverter that uses power switches to produce approximately sinusoidal voltages and currents of controllable magnitude and frequency. A cross-section of a two-pole induction motor is shown in Figure.4.

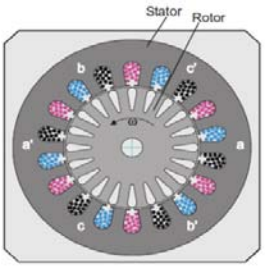

Fig.4 cross-section of induction motor

Slots in the inner periphery of the stator accommodate 3-phase winding a, b, c. The turns in each winding are distributed so that a current in a stator winding produces an approximately sinusoidally-distributed flux density

around the periphery of the air gap. When three currents that are sinusoidally varying in time, but displaced in phase by 120° from each other, flow through the three symmetrically-placed windings, a radially-directed air gap flux density is produced that is also sinusoidally distributed around the gap and rotates at an angular velocity equal to the angular frequency, of the stator currents. The most common type of induction motor has a squirrel cage rotor in which aluminum conductors or bars are cast into slots in the outer periphery of the rotor. These conductors or bars are shorted together at both ends of the rotor by cast aluminum end rings, which also can be shaped to act as fans. In larger induction motors, copper or copper-alloy bars are used to fabricate the rotor cage winding.

As the sinusoidally-distributed flux density wave produced by the stator magnetizing currents sweeps past the rotor conductors, it generates a voltage in them. The result is a sinusoidally-distributed set of currents in the short-circuited rotor bars. Because of the low resistance of these shorted bars, only a small relative angular velocity, r, between the angular velocity, s, of the flux wave and the mechanical angular velocity of the two-pole rotor is required to produce the necessary rotor current. The relative angular velocity, r, is called the slip velocity. The interaction of the sinusoidally-distributed air gap flux density and induced rotor currents produces a torque on the rotor. The typical induction motor speed-torque characteristic is shown in Figure .5.

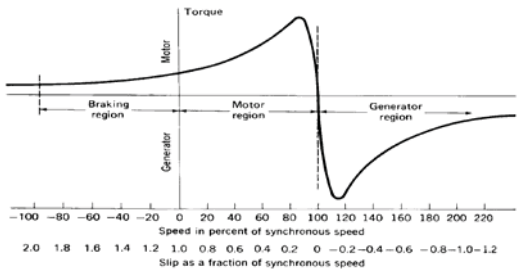

Fig.5 Induction Motor Speed-Torque Characteristics

IV. SIMULATION RESULTS

CHBMLI gives the near sinusoidal voltage waveforms to drive the induction motor. The MATLAB/ Simulink are used to simulate the three phase induction motor drive fed by 9-level and 11-level CHBMLI. By this for specific period of time the user can simulate the system thus it is possible to analyze the time response of system.

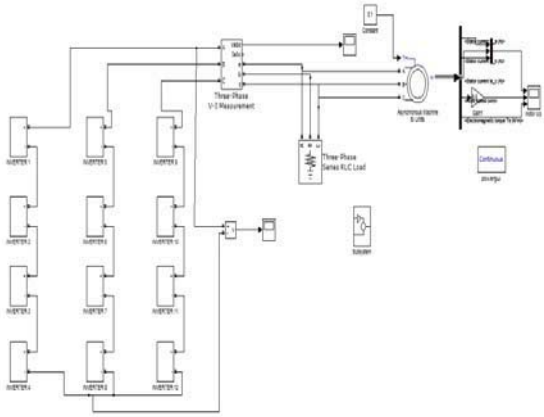

Fig.6 matlab/simulink model of nine level cascaded inverter

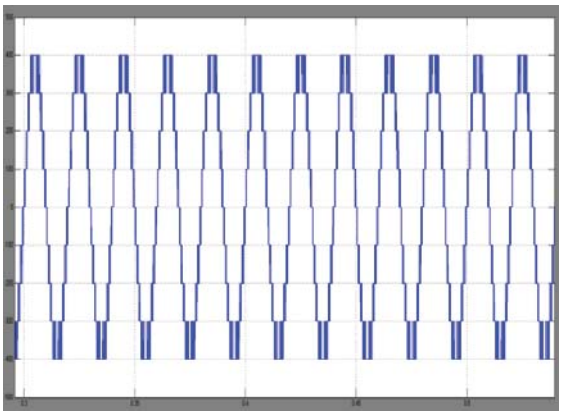

Fig.7 shows the simulation output voltage of nine level inverter

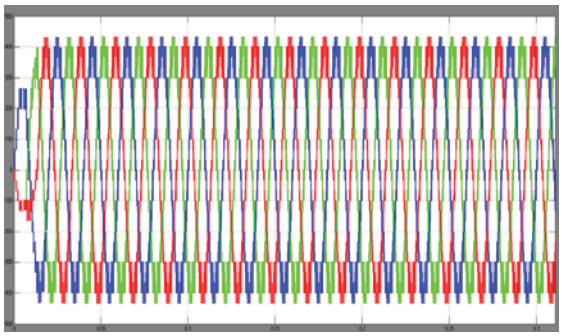

Fig.8 shows the simulation three-phase output voltage of nine level inverter

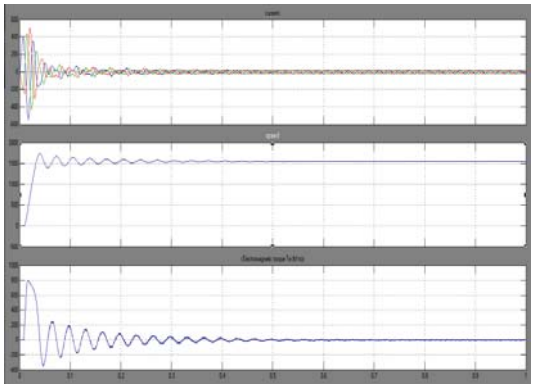

Fig.9 shows the simulation results of stator current, speed and torque of inverter when connected to induction motor

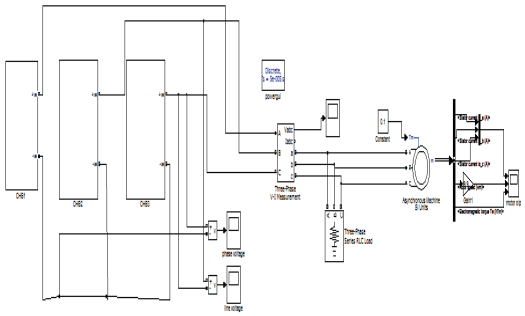

Fig.10 matlab/simulink model of eleven level cascaded inverter

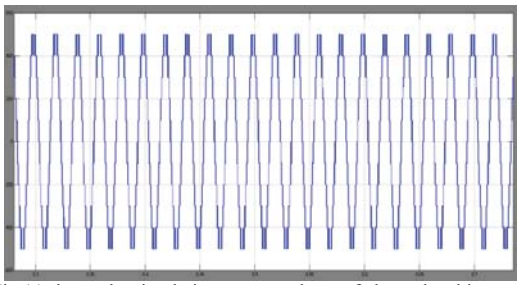

Fig.11 shows the simulation output voltage of eleven level inverter

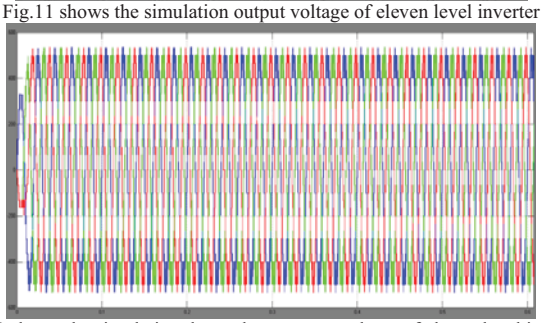

Fig.12 shows the simulation three-phase output voltage of eleven level inverter

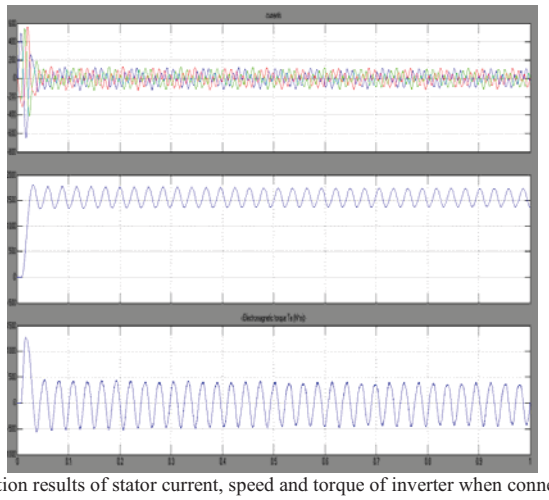

Fig.13 shows the simulation results of stator current, speed and torque of inverter when connected to induction motor

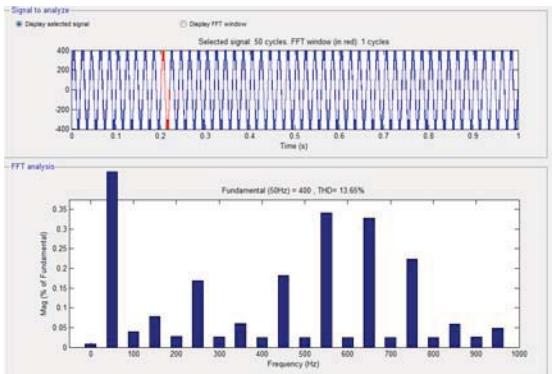

Fig.14 THD analysis of nine level inverter

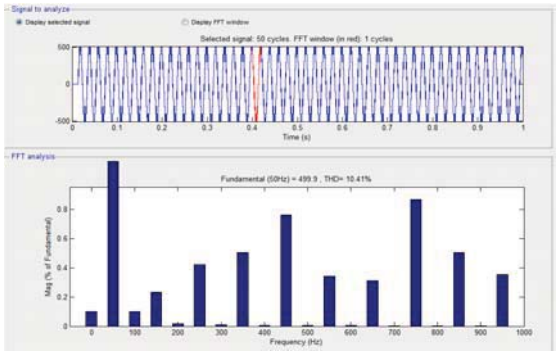

Fig.15 THD analysis of eleven level inverter

V. CONCLUSION

This paper presents a nine and eleven level inverter. The proposed inverter is simulated and the output waveforms show the efficiency of the inverter. This inverter is connected to the induction motor drive and the results of speed, torque and stator current characteristics of the induction motor are also shown. Level shifted sinusoidal pulse width modulation is used to drive the inverter, and this technique uses very less number of carrier waves. The proposed topology can be extended to any number of levels by suitable changes in the circuit diagram. One thing has to be considered that multilevel converters are no longer effective when considering the higher levels. Due to the more sinusoidal output filter cost also will be less and hence its size gets down. Though the number of switches increases, the rating of the switches gets decreased for the same drive rating, which leads to the economical savings. When it comes for the high power drives the performance plays a major role compared to the economy.

REFERENCES

[1] I. Rodr'lguez, .I. Lai, and F. Peng, "Multilevel inverters: Asurvey of topologies,controls and applications," IEEE Trans. Ind Electron., vol. 49, no. 4,pp. 724-738, Aug. 2002.

[2] I. Rodriguez, S. Bernet, B. Wu,.I. O. Pontt, and S.Kouro, "Multilevel voltage-source-converter topologies for industrial medium-voltage drives," IEEE Trans. Ind. Electron., vol. 54, no. 6, pp. 2930-2945, Dec.2007.

[3] K. A. Corzine, F. A. Hardrick, and Y. L. Familiant, "A cascaded multilevel H-bridge inverter utilizing capacitor voltages sources," in Proc.A IASTAD Power Electronics Technology and Applications Conference, Feb 2003.

[4] J. Chiasson, L. M. Tolbert, K. McKenzie, and Z Du, "A complete solutionto the harmonic elimination problem," IEEE Trans. Power Electron.,vol. 19, no. 2, pp. 491-499, Mar. 2004.

[5] B.P.McGrath, D.G.Holmes, and T.Meynard, "Reduced PWM harmonic distortion for multilevel inverters operating over a Wide modulation range," IEEE Trans.Power electronics , vol.51, no.4, pp.834-839, Aug.2004.

[6] M.Chithra and S.G.BharathiDasan "Analysis of Cascaded H Bridge Multilevel Inverters with Photovoltaic Arrays", 978-1-4244-7926-91111$26.00 ©2011 IEEE.

[7] Suvajit Mukherjee and GautamPoddar "A Series- Connected Three-Level Inverter Topology for MediumVoltage Squirrel-Cage Motor Drive Applications" IEEE TRANSACTIONS ON INDUSTRY APPLICATIONS, VOL. 46, NO. I, JANUARY/FEBRUARY 2010.

[8] J. Zhang, "High performance control of a three level IGBT inverter fed ac drives,".Conf Rec. of IEEE lAS Annual Meeting, 1995, pp. 22-28.

[9] Yun XU, Yunping ZOU, Xiong LlU, Yingjie He "A Novel Composite Cascade Multilevel Converter",The Annual Conference of the IEEE Industrial Electronics Society (lECON) Nov. 5-8, 2007, Taipei, Taiwan.

[10] Sanjay Lakshminarayanan,GopaIMondal, P. N. Telcwani, K. K. Mohapatra, and K. Gopakumar "Twelve-Sided Polygonal Voltage Space Vector Based Multilevel Inverter for an Induction Motor Drive With Common-Mode Voltage Elimination" IEEE TRANSACTIONS ON INDUSTRIAL EL ECTRONICS, VOL. 54, NO. 5, OCTOBER 2007.

[11] Emil Levi, Senior Member, IEEE "Multiphase Electrical Machines for Variable-Speed Applications" IEEE TRANSACTIONS ON INDUSTRIAL EL ECTRONICS,YOL. 55, NO. 5, MAY 2008 pgs- 1893-1909.