Performance analysis of e-supply chain using M/M/1 queue in Business to Business

Samara Mubeen
Department of information Science and Engineering
JNN College Of Engineering, Shimoga , India

N.K.Srinath
Department of Computer Science and Engineering
R.V. College Of Engineering, Bangalore, India

K.N.Subramanya
Department of Industrial Engineering and Management
R.V. College Of Engineering, Bangalore, India

Abstract - Business to business is the transaction of information between businesses carried out using the e-supply chain. Manufacturer use e-supply chain for producing products to satisfy the needs of the end users to do these correct suppliers should be identified by the manufacturer. The ordering of the sub product which is to be manufactured by the supplier is done through internet. In this paper we are proposing integrated e-supply chain framework consists of a manufacturer and any number of suppliers who are going to selected depending among the utilization of the queue, average number of packet in the queue and the number of packet processed time in seconds using M/M/1 queue. An algorithm is proposed and same is executed in the MATLAB.

Index Terms—business to business, e-supply chain frame work, M/M/1 queue, utilization time, average number of packet in queue, packet processed

I. INTRODUCTION

Business to business market is significantly larger than the consumer market. The way of communication in business to business is either by direct mail, advertising, interactive services such as website and search engines. Internet is media used for forwarding the packets. Internet use packet switching and it called delay system. When any request comes from client side here the manufacturer assembles the final product, server are the suppliers who are going to serve the request from the client immediately if the queue is idle or it goes into queue for some time which called as the waiting time of the packet in the queue. A client the manufacturer which requests for the resources which may be in form of mail, audio, video etc., equipped with a user interface usually a web browser for presentation purposes. All communication takes place using transfer of packet. Packets arrive according to Poisson process and job service time is exponential.

In the recent 20 years queuing is used in e-commerce. Same is used in transfer of information from business to business. Message using technology used in today's technology of computing infrastructure. The most of the communication is based on e-mail technology. By using the message queuing high service quality can be achieved. The message queuing concept is used in companies to meet the challenges of integrating their businesses [1].

Performance model is used as powerful tool for system configuration analysis. The systematic method is used to find a satisfactory configuration, this is based on two steps first is to find the hardware configuration performance and the second step queuing layered network model is evaluated [2]. A flexible flow line manufacturing is being adopted by the manufacturers to produce an increased number of variation or models of an end product in order to meet customer's preferences and demand. This concept is commonly witnessed in the manufacturing of automobile, computer and home appliance etc. The heuristic algorithm is used to measure the performance of proposed sequencing in the flexible flow line assembly [3].

Procurement is process of obtaining materials or services and managing their inflow into organizations is a critical problem in supply chain management. Internet technologies offer attractive opportunities to reduce

purchasing costs while increasing the speed and efficiency of procurement process through seamless network integration and automated execution of key tasks. Multiclass queuing network called probabilistic reentrant line [4].

The remainder of this paper is organized as follows: Section II gives an e-supply chain framework. Section III gives the algorithm for e-supply chain model using M/M/1 and Section IV presents the results and analysis of e-supply chain frame work model. Conclusion and future work are given in the final section IV.

II. E-SUPPLY CHAIN FRAMEWORK

Basic concept consider in designing of e-supply framework

In business to business the communication takes between business partners, here the communication takes place between the manufacturer and the supplier who will manufacture sub product. The manufactured sub product will be assembled at the manufacturer. The framework of e-supply chain model is designed by using M/M/1 queue. The model designed is the generic model. The generic model consists of one manufacturer who is the client requesting for the manufacturing of the sub products and two suppliers are the sever. Server receive the message of manufacturing sub product required for assemble at the manufacturer. The supplier is considered as the server and manufacturer is considered as the client. The manufacturer request for the manufacture of sub product to the supplier and supplier accepts the order if it has sufficient raw materials available for manufacturing the sub product. The communication between the client and the server takes place by sending the messages. which consist of the order for number of sub product, these messages are moved to e-supply chain which consist of M/M/1 queue, if the queue do not have any message i.e. the message to process, the requested packet is passed to the respective client for processing the message present in the queue.

The figure 1 shows the design of e-supply chain framework model. The figure shows the connection between suppliers and manufacturer. The e-supply chain framework model shows the two way communication. The information is communicated between the manufacturer and suppliers about the order for the sub product to be manufactured which is done by messaging using queuing concept.

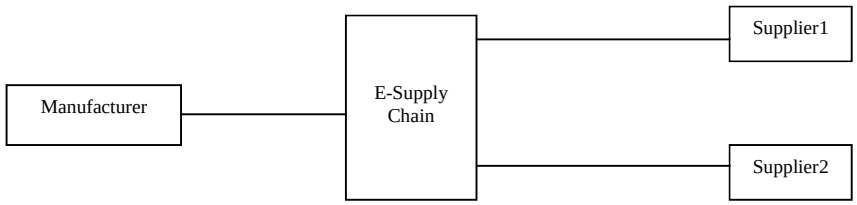

Fig1: Basic model of e-supply chain

The basic model of e-supply chain shows the message being transmitted between the manufacturer, e-supply chain and supplier. The messages contain the information of the quantity of the sub product to be manufactured. The e-supply chain consists of the m/m/1 queue in which message will be made to wait for some time if the queue has messages to process, and if the queue is idle the message are processed fast.

The detail design of e-supply chain is shown in the figure 2

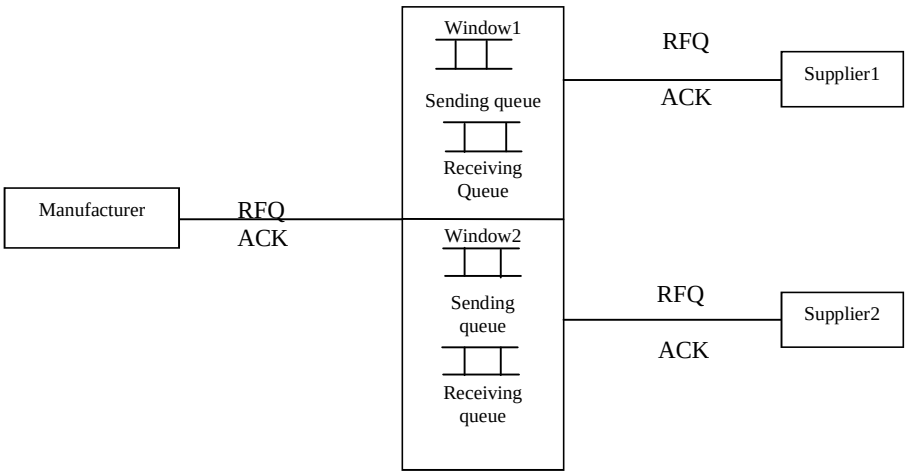

Fig 2: E-supply chain using M/M/1 queue.

The generic model consists of two suppliers who are the server and one manufacturer who is considered as client. The communication between them is brought by e-supply chain module which consists of M/M/1 queue. A separate window will be opened by the e-supply chain module for each supplier. In generic model since there are two suppliers therefore there are two windows consisting of two M/M/1 queue for each supplier. For example if there were three suppliers' three windows consisting of three M/M/1 queue will be provided by the e-supply chain module. Each window consists of two M/M/1 queue, one for providing service of the message from client to server i.e. from manufacturer to suppliers and one morequeue is for providing service to message from server to client, i.e. from the supplier to manufacturer.

The transaction of the message between the manufacturer and suppliers take place as given below:

1. The manufacturer sent message in the form of request for quotes RFQ to the suppliers who are selected randomly from the available suppliers.

2.These message is send to e-supply chain which consists of queue functioning in FIFO order, if the queue is idle that message will be processed first , if not the message is made wait for certain duration of time.

3. The RFQ is message received by the selected suppliers from the group of suppliers. Here in generic model only two suppliers are present namely supplier1 and supplier2.

4. After processing the message RFQ the suppliers in turn send the acknowledgement ACK to the manufacturer. Again the communication takes place through the queue present in the e-supply chain module. The ACK send by the supplier contains two information, one is that it RFQ has reached the respective supplier and other is that time required to process the order for sub product.

5. Finally the time in seconds of utilization of the e-supply chain module, average number of message in the queue, average delay in seconds and time in second for processing the message is obtained i.e. the lead time.

III. ALGORITHM OF E-SUPPLY CHAIN MODEL IN BUSINESS TO BUSINESS

The algorithm of find out the performance of the business to business using the analytical tool m/m/1 is given below:
1. Suppliers are randomly selected from group of suppliers.
2. Request for quote which contains messages about the number of order of sub product is randomly selected.

3. The message passed to the queue.
4. Depending on the queue idle or busy the queue the message is processed.
5. Utilization of the queue in seconds =time in server /simulation time.
6. Time in server =time in server +server status*time since last event.
7. Simulation time=minimum time next event.
8. Minimum time next event=exp(29).
9. Average number of message in queue=time in queue/simulation time.
10. Time in queue =time in queue + queue size *time since last event.
11. Average delay in seconds=total delays/number of message in queue.
12. Delay=simulation time- arrival time.
13. Arrival time =0.01 second.
14. Time in second for processing the message=service mean time/arrival mean time.
15. Total utilization time of the queue=utilization of the queue for sending the message from client to server + utilization of the queue for sending the message from the server to client.
16. Total average delay in seconds= average delay for sending the message+ average delay for receiving the message.
17.Lead time= time for processing message send to the server + time for processing message send to the client.

Description of the algorithm

The algorithm shows the working of the n-supplier b2b model having one manufacturer using m/m/1 queuing concept in the main module e-supply chain. The same algorithm can be used for generic model restricting the number of suppliers to 2. Manufacturer will send the request for quotes of the sub product to the suppliers; these messages are transmitted to e-supply chain upon the number of supplier selected randomly and this module which will open the window depending upon number of suppliers selected randomly. The window consist of two queues on for transmitting the message from client to server and one more queue for the transmitting the message server to client after processing the message.

The algorithm calculates utilization time of the server, time in second the average number of packet in the queue, simulation time in seconds and time required for processing the message in second. The same calculated for the receiving queue. The ACK send shows the message is processed by the server and this message is transmitted to the receiving queue in e-supply module. The message is send to the client. The ACK send back to the server indicating the it has received the message about processing of the message. Finally total simulation time in seconds, total utilization time in second of the queue, the total time the average number of message in the queue in second and lead time is the time in second for processing the message transmitted from client to server and after processing the message from server back to client.

IV. RESULT AND ANALYSIS OF THE B2B E-SUPPLY USING M/M/1

The algorithm is run on the MATLAB to get the following result and analysis. Here three result and analysis is carried on, which is given below:
1. Performance analysis of the message transmitted from the client who is the manufacturer and the server who are the suppliers through the main module e-supply chain.
2. Performance analysis of the message transmitted from the server after processing the message is send to the client in the form of acknowledgement.
3. Finally the total performance analysis for carry out the overall processing of message send from the client to server and server to client is calculated.

Performance analysis of the message transmitted from the client to server through the main module e-supply chain.
The message transmitted from the client to the server the supplier to manufacture the sub product which is done by using the request for quotes. The following performance parameters are considered which is given in the table 1.

Iteration	1	2	3	4	5	6
1	1	S1	47	16.95	23.8	35
2	2	S3	15	8.97	22.5	58.86
		S5	12	7.527	14.6	60.61
3	3	S3	36	14.09	12.6	43.87
		S2	29	13.41	22.6	40.24
		S1	54	18.73	31.7	29.14
4	4	S2	38	15.41	27	42.29
		S1	12	7.527	16.8	60.61
		S3	24	11.76	17.4	52.89
		S4	10	6.638	22.4	61.68
5	1	S4	56	18.38	21.42	27.45

Table 1: Performance Analysis of message transmitted from client to server.

The table1 shows seven divisions first column consist of the iteration the number of time the code is run which is five times, the second column consist of the number of selected during the iteration in the first iteration one supplier is selected, in second iteration 2 suppliers are selected, in third three supplier are selected, in fourth iteration four supplier are selected and finally in the last iteration only one supplier is selected, the third column consist of the supplier-ID which gives the information of the supplier selected from among the available suppliers ,here the available here the available suppliers are limited to five. In the first iteration s1 selected randomly, second iteration s3 and s5 are selected, third iteration s3, s2, s1 are selected, fourth iteration s2, s3, s1, s4 are selected and finally fifth iteration s3 is selected randomly. The fourth column consist of simulation time in seconds, fifth column utilization of server in seconds, sixth column average number of message in the queue in second and finally the seventh column number of message processed in second.

The chart1 shows the variation of the performance parameters.

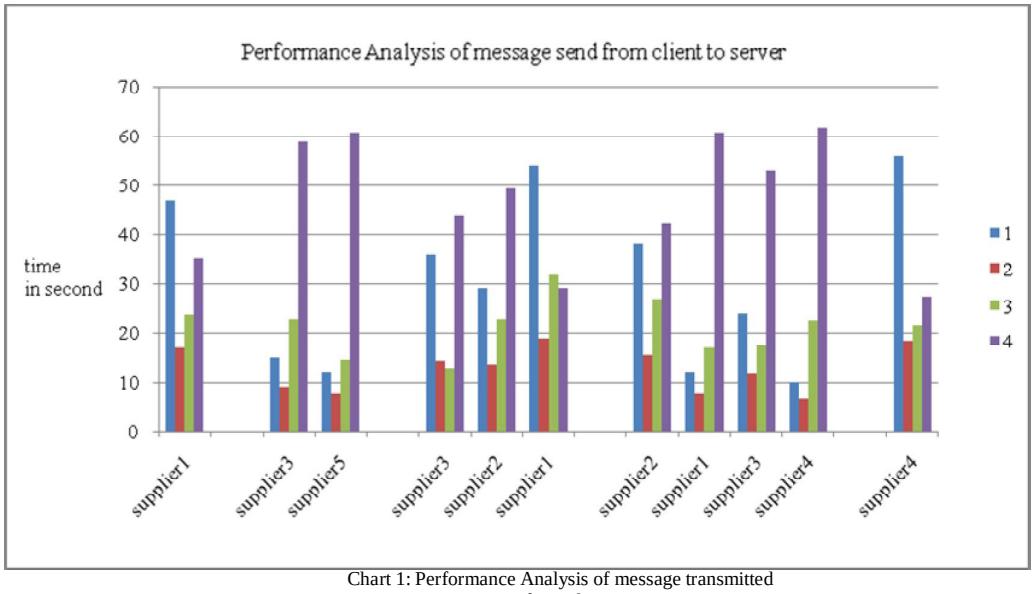

Chart 1: Performance Analysis of message transmitted from client to server

The chart 1 shows the details of performance parameter which are plotted time in second verses supplier-ID. The legend 1 is the simulation time, legend 2 is utilization time of the server, legend 3 is the average number of message in queue in second and finally legend 4 is number of message processed in second. The iteration five show the one supplier is selected among available five supplier having the supplier-id s4 which is going to start the simulation

time at 56 second, the utilization time of the server in second 18.38 second, the average number of message in the queue in second is 21.52 second and finally time in second to process the message is 27.45 seconds. Among all the performance parameter the fifth iteration consists of the least time.

The total performance analysis for carry out the overall processing of message sends from the client to server and server to client is calculated

Here performance analysis is carried on from the request for quotes which are message originated from the client who is the manufacturer which are transmitted to the main module e-supply chain through the sending queue then to the suppliers who are the server after being processed the messages are send back to the e-supply chain module through the receiving queue. The table3 shows the details.

Iteration	1	2	3	4	5
1	S1	100	34.95	48.85	64.99
2	S3	52	24.10	46.25	101.95
	S5	30	17.33	33.03	117.6
3	S3	62	25.77	27.74	95.331
	S2	80	31.16	45.96	80.91
	S1	81	30.62	52.52	79.87
4	S2	47	21.70	53.21	104.48
	S1	30	17.38	37.26	117.6
	S3	34	18.47	41.44	114.58
	S4	41	20.41	46.72	109.42
5	S3	96	33.88	39.50	68.15

Table 3: Performance Analysis of message transmitted from client to server and server to client

The table3 shows performance parameters involved in the analysis of the generic model. The table3 shows six columns first columns is the iteration, second column which is numbered as 1 is the supplier-ID, third column which is numbered 2 as total simulation time in second, fourth column which is numbered as 3 is the total utilization of the server in seconds, fifth column which is numbered as 4 is the average number of message in queue in seconds and sixth column which is numbered as 5 is the lead time. The chart3 shows the performance parameter being plotted time in second against the supplier-ID.

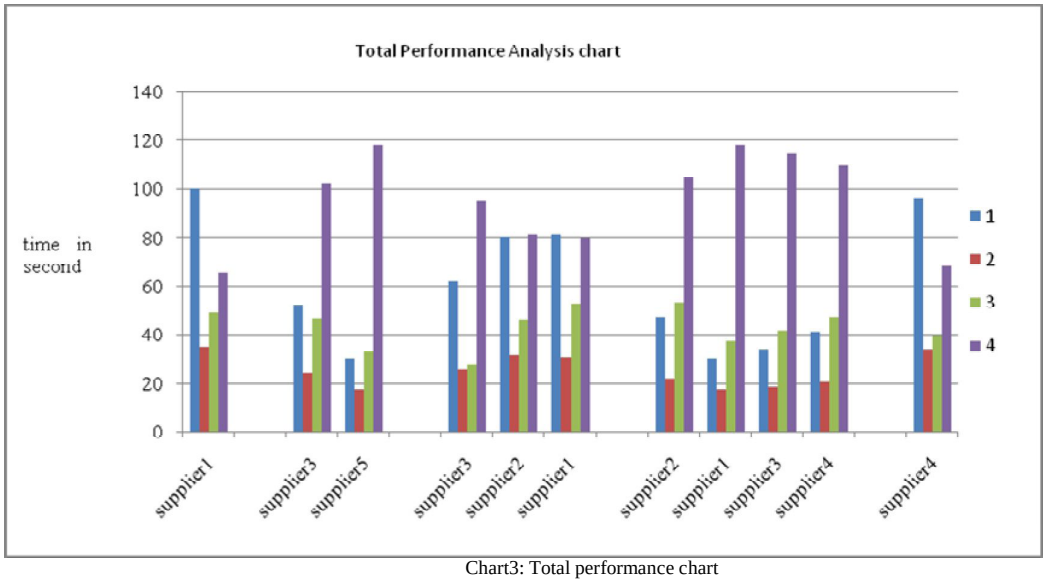

Chart3: Total performance chart

The chart shows total performance analysis. The supplier s1 is selected the simulation time taken to start for entire cycle i.e., for transmitting the message from client to server and back from server to client is 100 seconds, the total utilization time in second is 34.95 second, the total average number of message in queue in seconds is 48.85 and the lead time which is time in second for processing the message of processing the sub product is 64.99 second which is the least time compared to all the iteration. From these analysis the supplier 4 which is the in the iteration 5 takes less time compared to other suppliers.

V.CONCLUSION

In this paper performance analysis is carried on frame work model which is shown using two suppliers. The analysis is carried on with five suppliers which are going to be selected randomly. The messages which are transmitted in the form request for quotes and acknowledgement are used for analysis of the frame work which is designed. Here the main module e-supply chain consist of two queues M/M/1 queues for sending the message and one queue for receiving queue which speed up the movement of messages. The five performance parameters are considered to measure performance and the least time taken by the message is observed. By using this manger can estimate at what time there request for quotes can reach them supplier and after processing the message the message is send back in form of acknowledgement.

FUTURE WORK

In this paper we have considered only one manufacturer; we can calculate the performance for more than one manufacture using M/M/1 queue and queuing system. Even queuing system can be used for real product manufacturing and delivery of the product using simulation tools.

REFERENCES

[1] Dieter Gwalick. Message queuing for Business Integration. EAI Journal 2002.
[2] Karl Aberer, Thomas Risse et al. Configuration of distributed message converter system. Performance Evaluation An international Journal.2004,pp 43-80.
[3] L.K.Palaniappan and N.Jawahar. Integration of procurement and production scheduling in flexible flow-line assembly. International Journal Integrated Supply Management, 5(4), 2010
[4] C.V.L. Raju, Y.Narahari ,Queuing network modeling and lead time compression of electronic procurement, Proceeding of 2002 IEEE International conference on Robotics, Washington.
[5] C.M.Harries et.al 2000,'Internet-type queues with Power-tailed inter arrival times and computational methods for their analysis', INFOMS Journal on computing, vol.12, pp.261-271.
[6] Sarah Jinhui Wu & Gary L. Ragatz 2010,'evaluating the total effect of early supplier involvement on project team effectiveness: collaboration and interaction', international journal of integrated supply management,vol. 50, No.3, pp 239-259.

[7] Meysam Maleki et.al 2013,'Deleopment of supply chain integration model through application of analytic network process and Bayesian network ', international journal integrated supply management, vol.50, No. 3, pp. 239-259.
[8] M.Sadiq Sohailet.al 2009,'Strategic Supply chain integration and its impact on organisation performance: perspectives from an emerging nation', international journal integrated supply management, vol.5, No.1, pp.62-80.
[9] L.K. Palaniappan,N.Jawahar 2010,'Integration of procurement and production scheduling in flexible flow-line assembly', international journal integrated supply management, vol.5, No.4, pp. 344-364.
[10] I.Mura et.al 2001,'Markov regenerative stochastic Petri nets to model and evaluate phased mission systems dependability', IEEE transaction on computer, vol.50, No.112, pp.1337-1352.
[11] M.Smothernan&K.Zemodel 1989,' A non-homogenous Markov for phased mission reliability analysis', IEEE transaction on reliability, vol38,No.5,pp 585-590.
[12] Rene Caldentey& Lawrence M.Wein 2006,' Revenue Management of Make-to-stock Queue', Journal of Operation Research, Vo.54, No. 5, pp.832-844.
[13] Andy Wu et.al 2010,'Using Order Admission Control to Maximize Revenue Under Capacity Utilization