Efficient Interactive Control System based on GSM

Mohamed Salman
Student, Telecommunications Engineering
Caledonian College of Engineering, Muscat, Oman

Jayavrinda Vrindavanam
Faculty, Department of Electronics and Computer Engineering
Caledonian College of Engineering, Muscat, Oman

Abstract - After a review of the recent advancements in wireless automation systems, the paper introduces an efficient and economical automation system based on GSM technology. The proposed system uses Atmel AT89S52 as a central microcontroller which is cheaper, faster and can perform same functions as PIC microcontroller. The system will allow remote control of different appliances through SMS messages. In addition, in case of any faults or warnings detected by the system, an SMS message will be send directly to the owner of the system. The owner of the system can request status reports from the system at any time. The system is designed to be highly secured, flexible, reliable and affordable.

Keywords – Automation, Control System, Microcontroller, Embedded System, 8051, AT89S52, SIM300.

I. INTRODUCTION

Within the ambit of wireless technology, emergence of remote control based devices and appliances have become the order of the day. The scope of such applications ranges from a remote controlled small car toy or a TV to a system that can control a whole building or a factory. Such systems are referred to as Automation Systems. Automation Systems perform by allowing a number of devices to communicate with a central controller which in turn communicates all information to the user or the owner of the system as per the instructions and the structure of the system. The application of such automation systems could be in areas such as heating, lighting, security, energy management, audio and video systems, health monitoring, entertainment and so on. As part of remote control process of automation systems, there are various communication links that can be used such as RF, Bluetooth, Wi - Fi, Infrared, etc. In this context, this paper proposes a novel method of automation System based on GSM technology. GSM is an open, digital cellular technology used for transmitting mobile voice and data services. GSM supports 9600 kbps band rate for voice calls and data transfers and provides a global range of transmission. With this feature in view, the paper attempts to design a system that can interpret SMS messages and process them effectively, resulting in creating an Automation System that can be controlled wirelessly from anywhere in the world. Users will be able to control their small home appliances or big machineries by sending SMS messages to the controller. Such a system can save a large amounts of money, time and even workforce. The resultant system will be highly secure, reliable, flexible, user friendly and cost effective. Being an emerging area of research, a review of the most recent literature has been carried out and presented in Section II. The methodological framework and the system design are presented in Section III. Concluding remarks are given in section IV.

II. LITERATURE REVIEW

Being a recent addition to the literature, the paper has reviewed a few of the recent studies which have taken advantage of remote based controls. In a study carried out by Delgado et al [1], the authors have analyzed the potential of remote controlled Home Automation Systems and their benefits. Apart from this, the paper highlighted certain critical issues that have to be considered while developing a Home Automation System which range from reliability, robustness, usefulness, price to security factors. The study introduced an evaluation methodology for user interface based on certain factors. In another study[2], the authors have designed and implemented an internet based home automation system through wireless communication. The study viewed that the main purpose of home automation is to control home devices from a central control point. The study demonstrated that when the control of device is completely governed by machines, the operation of monitoring and reporting becomes essential. The system included a web page implemented on a web server used as an interface to control a number of devices and from which the whole system can be monitored. This module is connected to a master node through an RS232 cable. The master node controls a set of connected devices through RF link. In yet another paper[3], the authors have introduced a

Bluetooth based home automation system. The paper described a system that comprises a mobile host controller connected to a number of client modules through Bluetooth. The host controller is a PC with Bluetooth capability and a preinstalled user interface. A simple Home Automation Protocol (HAP) was developed to assist the communication between the Host and the Clients. The protocol supported dynamic configuration (addition and removal) of the devices and provided a prioritized exchange of data. Host Controller included a Graphical User Interface (GUI) that provided a set of operations including devices registration, control and diagnostic utilities. A similar study [4] presented a low-cost, expandable and secure Bluetooth based home automation system. The design was based on an Arduino BT board along with a set of appliances connected to it through relays. The host unit in the design was cell phone, instead of PC unit. A GUI was developed using Python script which is compatible with all Symbian OS platforms. The script allows the user to access and control a set of home appliances. Hence, this limits the use of the system to only cell phones with Symbian operating system. In another study, [5] the authors have designed and developed a simple and cost-effective automation system that allows individuals to manage home appliances from a computer or a handheld device. The study stated that the project was inspired after a conversation with a disabled individual who expressed that he would love to be able to open and close the doors on his own. The system consisted of a host unit with a GUI, a central control unit and a number of clients or target modules. The graphical user interface in the host unit communicates with the central control unit through Bluetooth. The communication between the target modules and the central control unit is through a secured Radio Frequency link.

From the perspective of the study, the developments summarized in the above reviews need to be looked into from the point of view of efficiency and economy. The systems presented in [2] and [3] were very expensive and the systems described in [4] and [5] lack transmission range, obviously on account of the type of platform that the systems operate. The challenge is to design a system that is secure, cost effective and has a good transmission range. In this context, it would be desirable to refer to a study [6] which is distinct compared to the prevailing approaches. The paper presented an automation system that uses Interactive Voice Response (IVR) as well as GSM to allow individuals to control appliances form remote places and notifies them about any faults in the system. The user can control a number of devices just by sending an SMS message. Also, using IVR, the user and the system can interrelate with each other. The system was designed on PIC16 microcontroller, and quite similar to the proposed system in this paper, as it uses GSM technology. GSM technology will provide a huge range of transmission. The proposed system, instead, will use Atmel AT89S52 as a central microcontroller which is cheaper, faster and can perform the same functions as PIC microcontroller.

III. Proposed System

Automation refers to the use of technologies and mechanics to do work that was previously done either manually or to perform similar tasks by extending and simplifying the scope and coverage of such automation. Home automation and industrial automation are types of automation where systems use wireless transmission technologies like Bluetooth, Wi-Fi or RF to send commands to a set of applications or machines and hence these machines respond to them accordingly. Keeping in view these factors, the proposed system intends to be used for home automation as well as for industrial automation. It will use the SMS messages in the GSM technology as a transmission medium to send commands to a set of applications. In addition, the system will also use the same technology to notify the user or the owner about any faults in the system or the applications. Also, the owner of the system can get status reports at any time by simply sending a status query SMS to the system. The GSM technology has the advantage of a world wide range compared to the other transmission technologies which are usually limited to a range of a few 100 meters. The system block diagram of the proposed system is shown in the following figure (Figure 1). The major steps involved in the system development are explained thereunder.

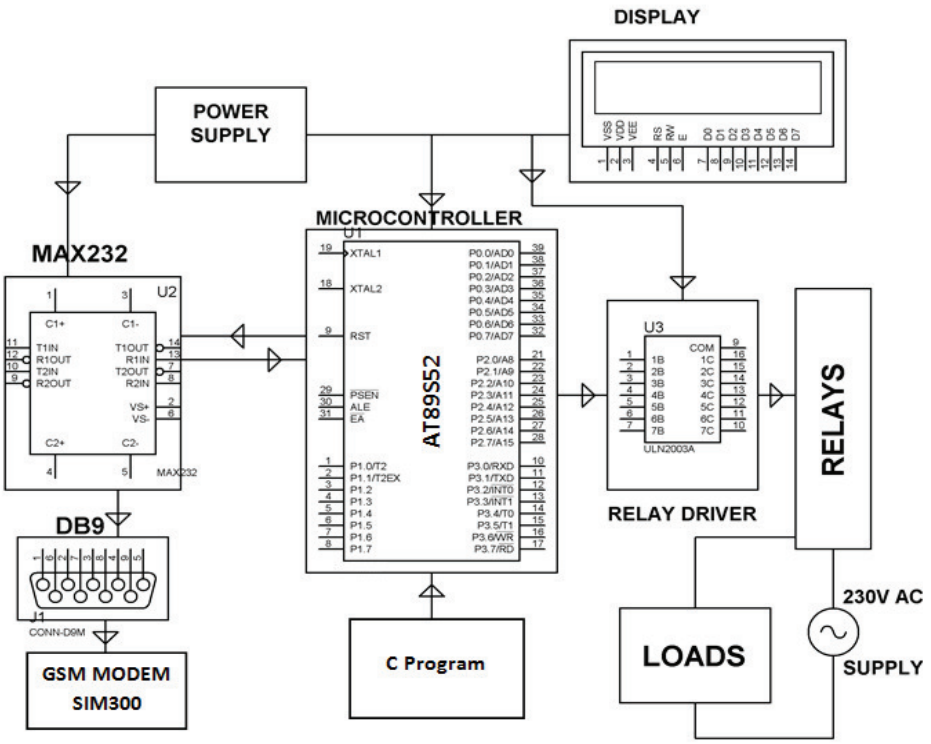

Figure 1. System Block Diagram

A. Power Supply

Just like most of the currently available electrical devices and home appliances, the project is powered by an on board power supply containing transformer for AC source, a bridge rectifier to convert to DC source and a voltage regulator to get 5V DC source. The power supply will provide 5V to the Atmel AT89S52 microcontroller, level shifter IC MAX232, ULN2003 Relay Driver and a 16×2 LCD module.

B. AT89S52 Microcontroller

The AT89S52 is a low-power, high-performance, inexpensive CMOS 8-bit microcontroller with 8K bytes of in-system programmable flash memory. The device is manufactured using Atmel's high-density nonvolatile memory technology and is compatible with the industry-standard 80C51 instruction set and pin-out. The on-chip flash allows the program memory to be reprogrammed in-system or by a conventional nonvolatile memory programmer. By combining a versatile 8-bit CPU with in-system programmable flash on a monolithic chip, the Atmel AT89S52 is a powerful microcontroller which provides a highly-flexible and cost-effective solution to many embedded control applications.

C. Level Shifter IC MAX232

The MAX232 is an integrated circuit that converts signals from an RS-232 serial port to signals suitable for use in TTL compatible digital logic circuits. The MAX232 is a dual driver/receiver and typically converts the RX, TX, CTS and RTS signals. The drivers provide RS-232 voltage level outputs (approx. ± 7.5 V) from a single + 5 V supply via on-chip charge pumps and external capacitors. The receivers reduce RS-232 inputs (which may be as high as ± 25 V), to standard 5 V TTL levels. These receivers have a typical threshold of 1.3 V, and a typical hysteresis of 0.5 V. MAX232 IC will convert a TTL Logic 0 to between +3 and +15V, and it will convert a TTL Logic 1 to between -3 to -15V, and vice versa for converting from RS232 to TTL.

D. Relay Driver ULN2003

Relay Driver ULN2003 is a high voltage, high current Darlington transistor array containing seven open collector Darlington pairs with common emitters. It consists of seven NPN Darlington pairs that feature high voltage outputs with common cathode Clamp diodes for switching inductive loads. The collector current rating of a single Darlington pair is 500 mA. For higher current capabilities, the pairs can be paralleled. ULN2003 is used to interface relays with the microcontroller since the maximum output of the microcontroller is 5V with too little current delivery and is not practicable to operate a relay with that voltage.

E. GSM Modem SIM300

It is a specialized type of modem that accepts a SIM card and operates over a subscription to a mobile operator just like a cell phone. From the mobile operator point of view, a GSM modem looks just like a cell phone. When a GSM modem is connected to a computer or a microcontroller, it allows the later to communicate over the mobile network. Most GSM modems are used to provide mobile internet connectivity, but they can also be used for dialing and receiving calls and sending and receiving SMS and MMS messages. Just like in cell phones, the mobile operator charges for these services. To perform these tasks, extended AT command set must be supported by the GSM modem.

SIM300 will be used for receiving commands sent from any mobile phones and sending reports and status messages to a predefined mobile phone number.

F. Working Principle

The system uses a GSM modem (SIM300) interfaced to the microcontroller (AT89S52) through a level shifter IC MAX232 and an RS232 cable. A SIM card will be inserted to the GSM modem. When the GSM modem receives an SMS command from any cell phone, it will communicate that information to the microcontroller through the level shifter IC (MAX232). MAX232 will convert the signal into appropriate form that can be understood by the microcontroller. The microcontroller will process the command and it will drive the relays connected to the loads through the relay driver ULN2003. Loads are turned ON/OFF corresponding to the command sent to the GSM modem. If a status request SMS was received by the GSM modem, the microcontroller will automatically send an SMS with a status report of all the loads. The complete operation process will be displayed on the 16×2 LCD module.

IV. IMPLEMENTATION AND RESULT

The system was simulated according to the block diagram given in Figure 1. For the sake of simplicity and flexibility, instead of sending full commands like "Turn ON LOAD 1", the user can send a single number to command. A simple formula was developed that can be used to know which number to send to turn ON/OFF any load. The formula is as follows:

$$Load\ Number\ \times 2 \Rightarrow To\ Turn\ OFF\ a\ LOAD$$

$$(Load\ Number\ \times 2) - 1 \Rightarrow To\ Turn\ ON\ a\ LOAD$$

Load numbers can be set by the user. For example, to turn ON load number 3, the user can send an SMS message with only the number "5" to the system, since ((3 × 2) – 1 = 5). Similarly, the user can send the number "6" to turn load number 3 OFF. A single controller can control up to 28 loads.

The system was simulated using Proteus v7.7 and the results found to be in the expected lines. The C program used in the system was written using Keil compiler and was added to the simulated module.

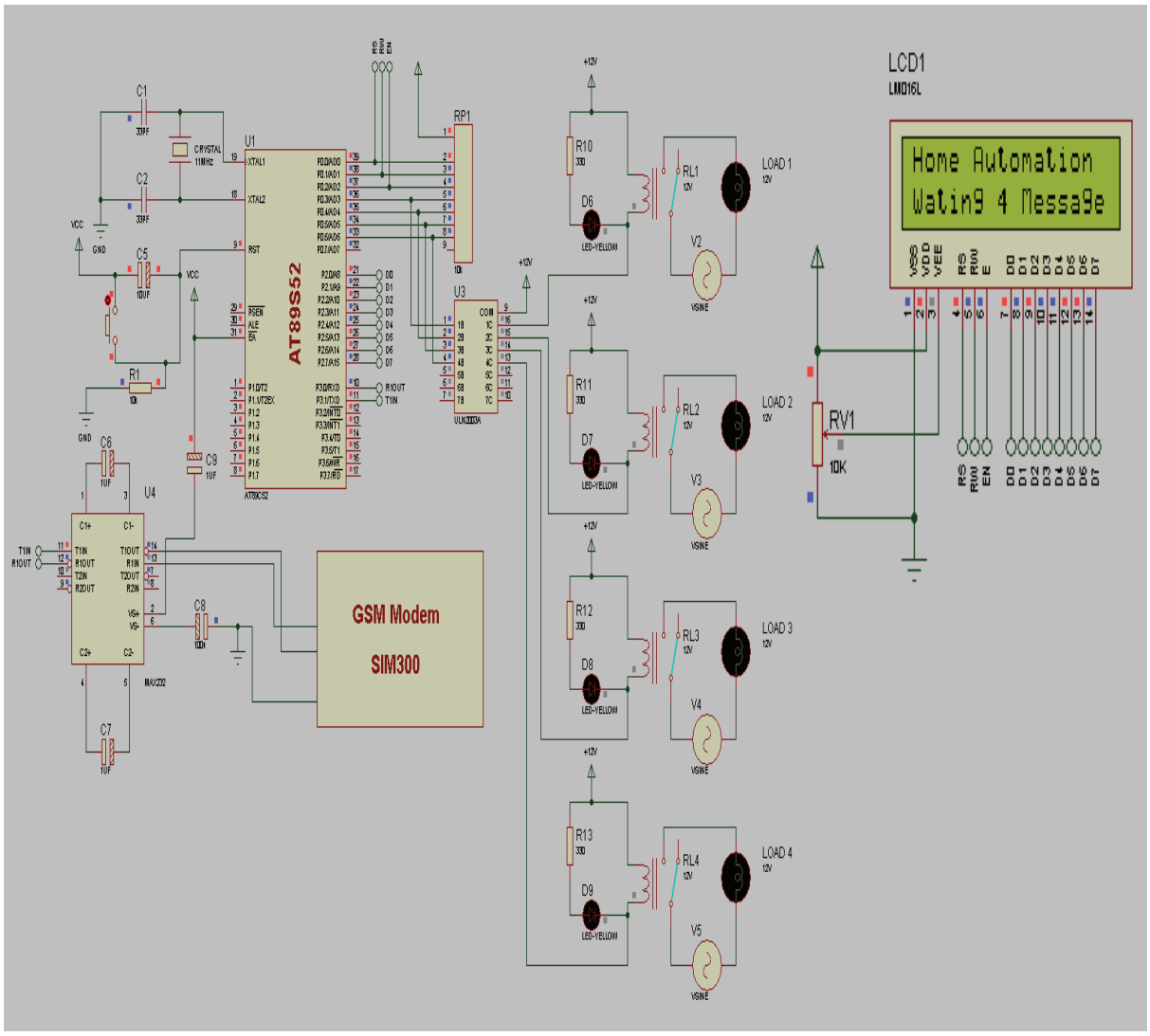

Figure 2. System model initialized and waiting for messages

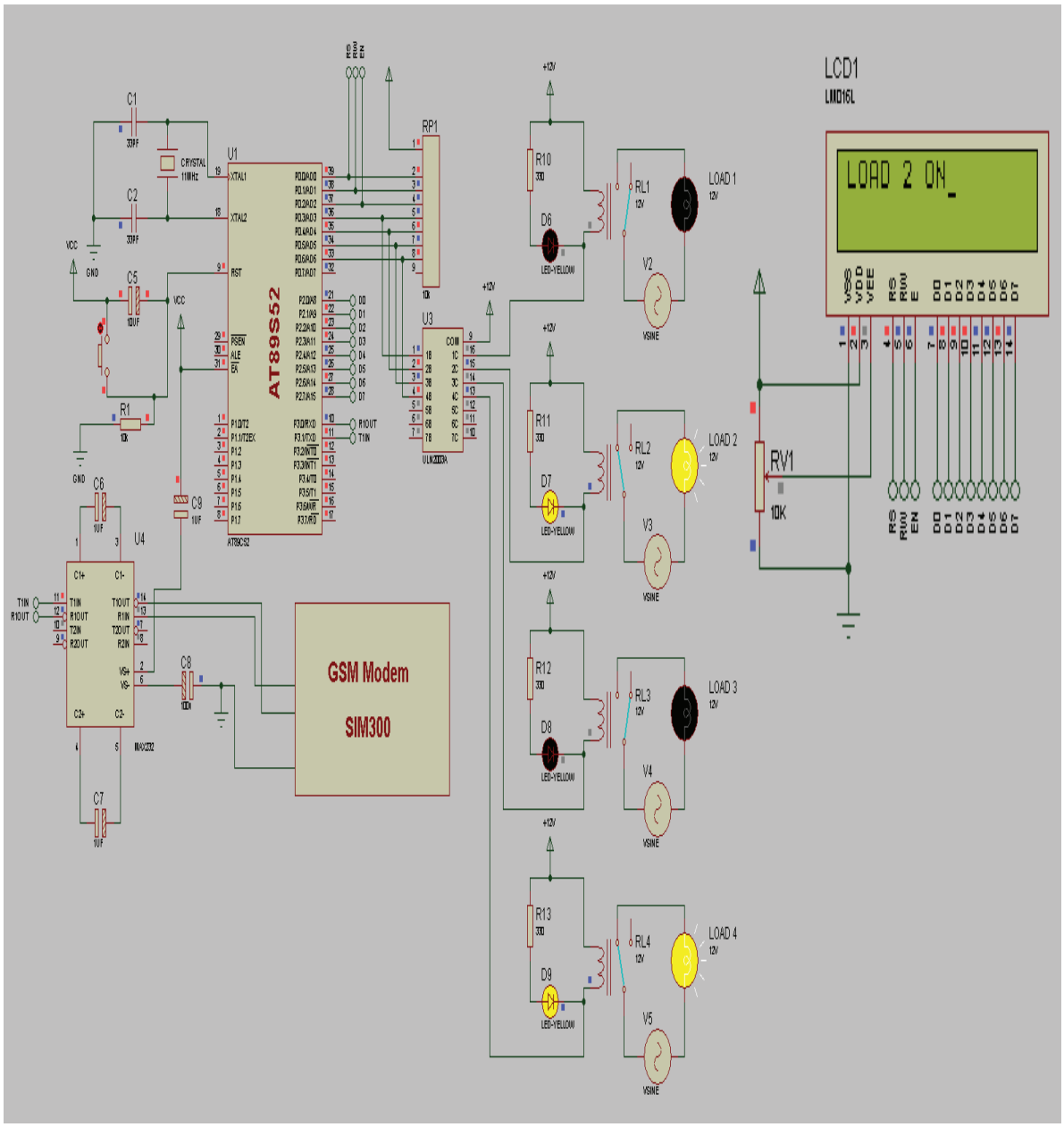

Figure 3. System model with loads 2 and 4 turned ON

The implemented system was found to be functioning as per expectations. Commands sent from any mobile phones to the system were interpreted correctly by the system and the corresponding load or appliance was turned ON or OFF. Also, the system was able to send a status report to the main host phone number. The entire operation of the system was displayed directly on an LCD Display.

V.CONCLUSION

This paper presents an inexpensive GSM-based interactive control system. A number of literatures related to the topic of control systems and automation were reviewed and analyzed. According to the proposed system, the host can be any cell phone and the client is a controller based on Atmel AT89S52. The controller is connected to a GSM modem through an RS232 cable and a level shifter IC. The paper provided explanation of the circuit diagram of the proposed system. The project circuit diagram was designed using Proteus v7.7 designing software. Also, a prototype of the system was assembled with the required components on a PCB (Printed Circuit Board). The system proved to

be efficient and practical. The proposed system is economical and efficient in comparison with the similar systems developed so far.

REFERENCES

[1] A. Delgado, R. Picking and V. Grout, "Remote-Controlled Home Automation Systems with Different", *Centre for Applied Internet Research (CAIR)*, 2006.

[2] A. Alkar and U. Buhur, "An Internet Based Wireless Home Automation System for Multifuntional Devices", 2005.

[3] N. Sriskanthan, F. Tan and A. Karande, "Bluetooth based home automation system" *ELSEVIER - Microprocessors and Microsystems*, Vol. 26, pp. 281-289, 2002.

[4] R. Piyare and M. Tazil, "BLUETOOTH BASED HOME AUTOMATION SYSTEM USING CELL PHONE", *IEEE International Symposium on Consumer Electronics*, Vol. 15, 2011.

[5] I. Petrov, S. Seru, and S. Petrov, "HOME AUTOMATION SYSTEM", *School of Engineering Science*, 2011.

[6] A. Jadhav, and P. Gadhari, "Interactive Voice Response (IVR) and GSM Based Control System". *Proceedings of the National Conference "NCNTE-2012"*. Mumbai. 2012

[7] P. Rigole, et al., "Component-based infrastructure for pervasive user interaction". *Proceedings of Software Techniques for Embedded and Pervasive Systems*., 2005.

[8] S. Neng, et al., " integrated, flexible, and Internet-based control architecture for home automation system in the internet era". *Proceedings ICRA `02. IEEE International Conference on Robotics and Automation*, Vol. 2, pp.1101-1106, 2002.

[9] E. Yavuz, et al., "Safe and Secure PIC Based Remote Control Application for Intelligent Home". *International Journal of Computer Science and Network Security*, Vol. 7, No. 5, May 2007.

[10] B. Koyuncu, "PC remote control of appliances by using telephone lines". *IEEE Transaction on Consumer Electronics*, Vol. 41, No. 1, pp.201-209, 1995

[11] M. AL-Rousan, et al., "Java-Based Home Automation System". *IEEE Transaction on Consumer Electronics*, Vol. 50, No. 2, May 2004.

[12] B. Myers, et al., "Taking handheld devices to the next level". *IEEE Computer Society,* December, pp. 36-45, 2004

[13] D. Greaves, "Control Software for Home Automation, Design Aspects and Position Paper". *Proceedings of the 22nd International Conference on Distributed Computing Systems Workshops (ICDCSW'02),* 2002.

[14] J. Nichols, et al., "Generating Remote-Control interfaces for Complex Appliances". *Proceedings of the ACM Conference of User-Interface software and* Technology (UIST02), ACM press, pp. 161-170, 2002.