Taxonomy on Routing Protocols of Wireless Sensor Protocols

Sulakhe Vinayak V.
Department of Electronics Engineering
Walchand College of Engineering, Sangli, 416415, Maharashtra INDIA

Dr. Mrs. S.D.Apte
Department of Electronics & Telecommunication Engineering
Rajarshi Shahu College of Engineering, Tathawade, Pune 411033 INDIA

Abstract- Sensor nodes in WSNs have limited capacity but a very minimal cost. Large-scale deployment of such low power, low-cost sensors can do the task which a very large network can do. However, the routing protocols in such WSNs play definite role in deciding the success or failure under different scenarios. To have extended network lifetime, efficient Routing Protocol is important. In this paper, we study and compare the different protocols suggested by various researchers. First we discuss the WSN design parameters and then compare the protocols on four important design parameters. This study reveals some important aspects, which need to be taken into account while suggesting new Routing Protocols.

Keywords – Routing Protocols, Wireless Sensor Networks, Taxonomy

I. INTRODUCTION

WIRELESS sensor networks has become as an emerging tool which can used for wide variety of applications which requires monitoring of the situation before initiating any action. They can be applied virtually in wide areas of our social lives. This may include but not restricted to disaster management, environment monitoring, facility management, intelligent homes, precision agriculture, medicine, logistics, health-care, military command and control, green-house monitoring, structural-problem monitoring etc. [1,2]. Wireless Sensor Network can contain hundreds of sensing nodes which might be having limited energy capabilities which are usually deployed randomly in a wide area under scrutiny. These nodes must therefore be economical and energy efficient as possible, so that they can be used for longer duration. All such nodes will be deployed in random places in a dynamically changing environment. The selection of routing strategies is thus an important issue for the efficient delivery of the data-packets to the destination. Also important is that for such WSN, the applied routing strategy must be such that it would ensure that the minimum energy is consumed so as to achieve maximum uptime of the network.

In any wireless sensor network, the sensors can be deployed in any facility or area which is to be sensed or monitored. This deployment can be is some regular polygonal shape (like a triangle or a square) or it can be in some irregular sensor platform. When a very large number of inexpensive sensors are deployed they can perform the job what an expensive network can also do. In the times to come, such unattended sensors will operate and work in synergy to perform number of things as is expected. This job is essentially like a sensing of physical parameters, data collection & reporting and may be performing some assigned task. These sensor nodes were earlier thought to be immobile but today limited-mobility WSNs are been designed and tested for their efficacy. These WSNs may depending upon specific application (military) may also be deployed in hostile environment. Routing protocols for each of the application so will be suited for that application.

The challenges and concerns of the deployment of WSN are:

a) **Scalability**: When the WSN consists of a very large number of nodes spread randomly throughout the area managing them becomes a gruesome task. Distributed and localized routing protocols are useful in such cases. One might also tend to believe that using large number of sensor nodes will lead to increased tracking results, however this is not the case. Beyond some critical threshold increasing the number of sensors in the network cannot be of any further help. The sensor density can be calculated by using [3]:

$$\mu(R) = (N. \pi. R^2) / A$$

where N is the number of scattered sensor nodes in the region A and R is Radio transmission range. μ(R) gives the number of nodes within the transmission radius of each node in the region A.

b) **Stability**: When the sensors are deployed in outdoors or hostile environment, their failure is always a worrisome and therefore a challenge and an issue for concern for the designers. As the sensors in WSNs thrown in random manner, they must be able to respond to dynamically changing environments and must be able to reconfigure themselves. So routing protocols must be designed so as provide maximum throughput to the system.

c) **Production Costs**: Since sensors are deployed in a very large numbers, the cost of individual node is very important to justify the overall cost of the project. So the cost of each node has to be kept to minimum. Some applications also justify the sensor nodes which have additional units like sensing and signal-processing, location finding systems, mobilizers or even power generators (solar panels) on them. Result is the increased cost of each node.

d) **Energy**: Sensors are deployed in different terrains and since no external power source is available, they are operated from battery as the sole provider for their energy requirements. So, the conservation of energy is the prime concern so as to maximize the network life. Sensors while doing on-board signal-processing and communications with the neighboring nodes certainly consume lots of energy. So energy awareness has to be incorporated in all the aspects while designing a WSN.

II. Architecture of a generic Wireless Sensor Network

The architecture of a generic WSN [1] essentially consists of sensor nodes, clusters, cluster-heads, base station and End-user. A sensor node usually consists of four sub-systems or units a) Computing unit, b) Communication unit, c) Sensing unit and d) Power Supply unit [Fig 1]. Sometimes data-storage unit is also a part some modern sensors. Clusters are the organizational unit for WSNs. The nature of WSNs makes it necessary for them to be broken down into small clusters to simplify the task of communication. Cluster-heads are the organizational heads of the cluster [3]. They often organize and re-organize the activities (like data aggregation and communication scheduling) happening within the cluster. The base station is at the upper level in the hierarchy of the WSN. The job of the base stations is to provide communication link between the sensor nodes and the end-user. The end-user is the one who generates queries to be sent to the WSN.

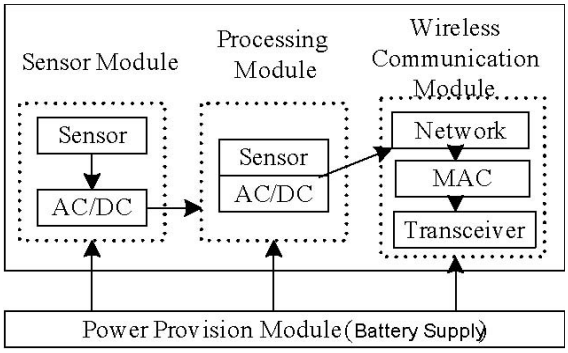

Fig 1. Architecture of a generic Wireless Sensor Network

Since the network requirements of the WSN are essentially different from the traditional wired or wireless networks, the WSNs can either be:

a) **Data-Centric**: Sensor nodes in WSNs may not always need some ID or address. Many WSN applications just focus on the data generated by the sensors for their use. However in those application which rely on querying the sensor nodes (like what is the temperature at a particular location?), the ability to address an individual sensor is essential. Here the data is related to the location of the sensor node. Sensor data now gets associated with the physical context of the sensor itself, so spatial co-ordinates of the sensor happen to be the obvious way to name the data. This makes the localization (finding the location of the node within the co-ordinate system) an important task.

b) **Application-Specific (Localized)**: Individual sensors can be designed to perform number of tasks in the system. These tasks can be (but not limited to) information gathering, collecting and storing data, forwarding this data on request from neighboring nodes. This is different from the node-to-node packet switching using

routers in traditional networks. In case of centralized networks, a single point failure can have catastrophic effects on the network lifetime. Localized networks are better suited where each sensor node communicates with neighboring node and computation is also done locally. This can still achieve desired goal/objective.

III. Routing Protocols for Wireless Sensor Networks

Wireless sensor networks have a wide range of applications such as environment monitoring, biomedical research, human imaging and tracking, military applications and precision agriculture. Routing protocols in WSN are greatly influenced by many factors, some of which are enlisted here: fault tolerance, scalability, production costs, operating environment, sensor network topology, hardware restrictions, communication model, transmission media and battery power (energy)

Conventionally sensor nodes had limited energy and there is no external source of input power to the nodes. Hence, while selecting any Routing Protocol care has to be taken as to how much information is flowing in the network. It should be such that a fine balance is obtained between the shortest path selection and energy used. Routing protocols can either be re-active or pro-active. In the first case the routes are created as when they are needed[2], whereas in the latter case updated routing information is maintained in the routing tables. In either case the routing can be forward (source initiated) or backward (destination initiated).

The simplest of the routing protocols is the **flooding** protocol where a node sends the information to all of its neighbor nodes. This scheme thought may seem simple, suffers from the problems of **Implosion** and poor **resource-management**. In case of Implosion all the neighbors will have the copies of the same information thus resulting in resource wastage. In the later scheme, the nodes are not resource-aware and perform their duties without bothering of the available energy. This is not desirable where we want to ensure prolonged network life of the WSN.

IV. Routing Protocols Parameters

Following are some of the parameters on which the various routing protocols can be compared or analyzed.

i) Scalability: Scalability is the ability of the protocol to deal with increasing amounts of work in the WSN in a decent manner without failing. In other words the performance of the protocol is table for both small and large networks.

ii) Mobility: The mobility is the ability of the protocol to work in case where are fitted with mobile agents.

iii) Route Metric: The route metric refers to the routing where packets of data are sent over a network in such a way that the path taken from the sender node to the receiver node is the most efficient. This minimizes the energy used and thereby increasing the network's lifetime.

iv) Periodic Message: Periodic messages are the messages that the nodes exchange with each other in order to have an updated view of the nodes that are alive on the network.

v) Robust: A protocol that performs well even in cases of unordinary conditions, for example in sudden changes of the topology of the network, is considered as robust protocol.

Taking into account several factors influencing the architecture of the WSN, the routing protocols can be classified as follows:

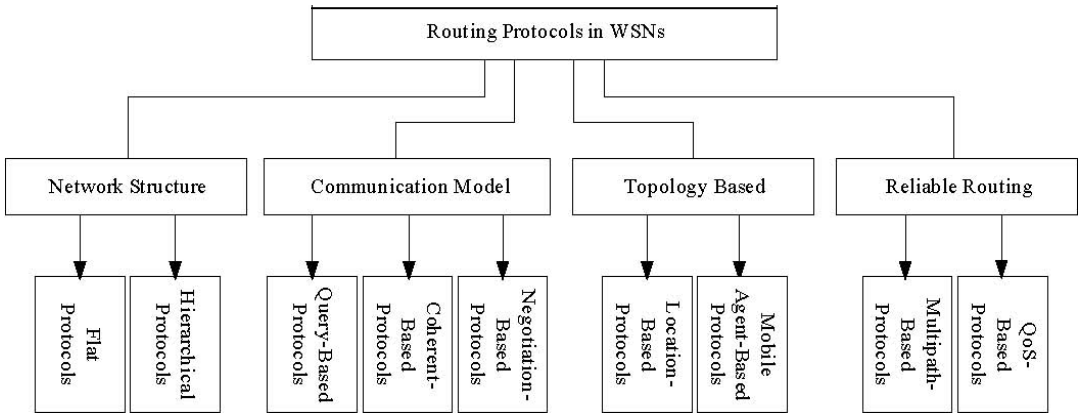

i) Structure of the Network: The logical structure of the WSN can be used to classify the routing protocols. The nodes in some network are supposed to be deployed uniformly and are placed equidistance from each other. Sometimes the level of participation of the nodes is also the factor for classification of routing protocols. Most popular amongst them are the **Flat Protocol**, where all the nodes in the network have the same role to play. Such architecture offers several advantages, including minimum overhead costs for maintaining the communication link between the sensor nodes.

TABLE I: COMPARISON BETWEEN FLAT ROUTING PROTOCOLS

Routing Protocol	Advantages	Disadvantages	Scalability	Mobility	Route	Robust
Wireless Routing Protocol	Looping situations are avoided and in case of link failure provides faster route convergence	Not suitable for highly dynamic and for very large wireless networks.	Limited	Limited	Shortest Path	Low
Topology Based Reverse Path For.	Periodic topology updates are sent less frequently	It is not suitable for networks with low mobility	Limited	Good	Shortest Path	Good
Temporary Ordered Protocol	Communication overhead is minimum, supports multi- routes and multicast	It does not incorporate multicast into its basic operation	Good	Good	Shortest Path	Low
Gossiping	Avoids the implosion problem	Long time to propagate the message to all sensor nodes.	Good	Good	Random	Good
Flooding	It is a simple and robust technique	It may broadcast duplicated messages are to the same node	Limited	Low	Shortest Path	Good
Rumor Routing	It is able to handle node failure gracefully, degrading its delivery rate linearly with the number of failed nodes	It may deliver duplicated messages to the same node	Good	Low	Shortest Path	Good

The other is **Hierarchical Protocol**, where to achieve the energy efficiency, stability and scalability; the nodes are organized in clusters in which that node with higher residual energy takes the roles of cluster-head. The clustering technique has the advantage to reduce the energy consumption and thereby increase the network life-time

TABLE II: COMPARISON BETWEEN HIERARCHICAL ROUTING PROTOCOLS

Routing Protocol	Advantages	Disadvantages	Scalability	Mobility	Route	Robust
LEACH	Low energy, ad-hoc, distributed protocol	Not suitable for the networks deployed in large regions and the dynamic clustering brings extra overhead	Good	Fixed BS	Shortest Path	Good
LEACH-C	The energy for data transmission is less than LEACH	Overhead	Good	Fixed BS	The best route	Good
PEGASIS	The transmitting distance for most of the node is reduced	Base station's location is not considered and the energy of nodes when one of nodes is selected as the cluster	Good	Fixed BS	Greed route selection	Good
TEEN	Suitable in the conditions like sudden changes in the sensed attributes	Lot of energy is consumed and overhead in case of large network	Good	Fixed BS	The best route	Limited
APTEEN	Low energy consumption	Long delay	Good	Fixed BS	The best route	Good

ii) Communication Model: It is related to the way in which any routing protocol is followed in order to route the packets within the WSN. Such routing protocols obviously can deliver larger throughput for the given amount of available energy on the nodes. Though such protocols can have higher dissemination rate and best energy utilization, the problem with them is that they do not have high delivery ratio for the data sent to the end-user. The protocols in this type can be **Query Based Protocols [6]** where destination node sends the query for the specific task (check the temperature) to the specific node.

TABLE III: COMPARISON BETWEEN QWERY BASED ROUTING PROTOCOLS

Routing Protocol	Advantages	Disadvantages	Scalability	Mobility	Route	Robust
DD	It extends the network lifetime	Not useful for continuous data delivery or event-driven applications	Good	Limited	The best path	Low
COUGAR	Energy efficient when generated data is huge	Overhead complexity of the synchronization	Limited	No	The best path	Low
ACQUIRE	Suitable for single and complex queries for which response is got from by many nodes	Flooding	Limited	Limited	Shortest Path	Low

Negotiation Based Protocols which use meta-data negotiations to reduce redundant transmission in the network.

TABLE IV: COMPARISON BETWEEN NEGOTIATION BASED ROUTING PROTOCOLS

Routing Protocol	Advantages	Disadvantages	Scalability	Mobility	Route	Robust
SPIN-PP	Simplicity, implosion avoidance and minimal start-up cost	It does not guaranty the delivery of the data and consumes unnecessary power	Good	Yes	Each node sends data to its single-hop neighbors	Good
SPIN-EC	When the energy comes to low threshold, it adapts by reducing its participation	Does not stops its nodes from getting messages such as ADV or REQ below low energy level	Good	Yes	Each node sends data to its single-hop neighbors	Good
SPIN-BC	Better than SPIN-PP for broadcast networks by using one-to-many comm.	It has to wait for a certain time before sending out the REQ message	Good	Yes	Each node sends data to its single-hop neighbors	Good
SPIN-RL	Disseminates data through broadcast even in a communication asymmetric	Time consuming	Good	Yes	Each node sends data to its single-hop neighbors	Good

Coherent Based Protocols where the data is forwarded to the destination node after some basic processing is done. **Non-coherent Based Protocols** where the data is forwarded to the destination without any processing or in the raw form.

TABLE V: COMPARISON BETWEEN COHERENT AND NON-COHERNT BASED ROUTING PROTOCOLS

Routing Protocol	Advantages	Disadvantages	Scalability	Mobility	Route	Robust
SWE	It builds a minimum-hop spanning tree	It is a complex protocol	Good	No	Shortest Path	Low
MWE	Sensors in the network equipped with min. energy paths to source	Long delay and low scalability	Low	No	Shortest Path	Low

iii) **Network Topology**: These routing protocols use the principle that each node in the WSN is equipped with some topology information and the main process of the protocol operation is based on the physical structure of the network itself. **Location Based Protocols** take the advantage of position information to relay the data collected or received by the node. The nodes in this WSN can be limitedly mobile but have little scalability for obvious reasons. It is important for each node to know the location of all other nodes for its proper functioning.

TABLE VI: COMPARISON BETWEEN LOCATION BASED ROUTING PROTOCOLS

Routing Protocol	Advantages	Disadvantages	Scalability	Mobility	Route	Robust
DREAM	Efficient data packet transmission	The waste of network bandwidth	Limited	Good	The paths that minimize total power consumption	Good
GEAR	It attempts to balance energy consumption and thereby increases the network life.	The periodic table exchange	Limited	Limited	The best route	Good
GEM	Messages efficiently routed in the network, each node needs to know the labels of neighbor	It overloads nodes that are at low levels of the tree	Good	Limited	Shortest Path	Good
IGF	Robust performance, distribution of the workload	It depends on the up to date local neighbor tables	Limited	Good	The best route	Good

Mobile Agents based Protocols provide extra flexibility as compared to conventional WSN deployments. Here mobile agents are used for data routing from the sensor to the destination.

TABLE VII: COMPARISON BETWEEN LOCATION BASED ROUTING PROTOCOLS

Routing Protocol	Advantages	Disadvantages	Scalability	Mobility	Route	Robust
MIP	Consumes less energy when the large number of nodes are present	High delay	Limited	Good	Paths which that reduce the total power consumed	Good
IEMF/ IEMA	This protocol seeks to optimize the remaining itinerary to a certain degree	This is un-scalable with a large number of source nodes to be visited	Limited	Good	Paths which that minimize the total power consumed	Good

iv) **Reliable Routing Protocols**: The protocols in this group are more robust to the route failures. This robustness can be obtained by load balancing routes or by satisfying minimum QOS criterion such as delay, bandwidth and energy needs. **Multipath Based Protocols** where the load balancing is done which makes the routing protocols more robust.

TABLE VIII: COMPARISON BETWEEN RELIABLE ROUTING BASED ROUTING PROTOCOLS

Routing Protocol	Advantages	Disadvantages	Scalability	Mobility	Route	Robust
ROAM	It can inform routers when a destination is unreachable and prevent routers from sending unnecessary search pkts	It needs to send Hello messages to maintain the active nodes	Limited	Limited	Any path	Limited
LMR	The label information can reduce the routing overhead and backup path setup delay	It may have an overhead in order to find the possible alternate paths	Good	Good	Any path	Good
GRAB	Depend on the collective efforts of multiple nodes to deliver data, without depending on any one.	It may have overhead by sending redundant data	Good	Good	Set of disjoint paths that satisfy QoS needs	Good

QOS based Protocols where the network takes up the job of energy consumption and data rates.

TABLE IX: COMPARISON BETWEEN QOS BASED ROUTING PROTOCOLS

Routing Protocol	Advantages	Disadvantages	Scalability	Mobility	Route	Robust
SAR	Low power consumption It maintains multiple paths to destination	Overhead of keeping the tables and states at each sensor node especially when the number of is huge	Limited	No	The path that minimizes the average weighted QoS metric	Low
SPEED	It performs well in terms of end-to-end delay and miss ratio	It does not perform well in heavy congestion networks	Limited	No	The path that is the Stateless Geographic Non-Deterministic	Low
MGR	Minimizes the energy consumption and satisfy constraints on average delay	It treats the delay guaranteeing as the goal with top priority	Good	Good	The path which minimizes delay	Low

IV.CONCLUSION

Routing in WSNs has attracted many researchers in the recent years. There are many problems which are specific to each application so lots of work needs to be done while addressing various issues related to WSNs. In this paper, we have tried to have a short overview and comparison of various Routing Protocols which are proposed by different researchers in this field. The protocols have been classified in the conventional way into four different categories namely Network Structure, Communication Model, Network Topology and Reliable Routing. We can also observe that some hybrid models can be fitted into more than one category.

The performance of these protocols needs to be ascertained for the specific application under study. Node mobility and energy conscious protocols are the ones which are interesting to be understood for newer applications like medical field (say monitoring of some health parameter of the person on the move).

Also as this study reveals, it is not possible to design and use a single routing protocol which will have good performance under all conditions for all the applications.

Since the routing protocols are deciding factors in the efficacy of the WSN in total, their through study and deployment of new ideas in the same needs to be undertaken.

REFERENCES

[1] I.F. Akyildiz, W. Su, Y. Sankarasubramaniam, and E. Cayirci., “A Survey on Sensor Networks”, *IEEE Journal on Communication*, Volume 40, Issue 8, August, pp. 102-114, 2002.

[2] K. Akkaya and M. Younis, “A Survey on Routing Protocols for Wireless Sensor Networks”, *Science Direct, Elsevier,AdHoc Networks, Volume 3, Issue 3, pp. 325-349, 2005*.

[3] N.Bulusu, D.Estrin. L.Girod. J. Heidemann, "Scalable coordination for wireless sensor networks:Self-configuring localization systems”, International Symposium on Communication Theory and Applications, Ambleside, UK, July 2001.

[4] R .V. Biradar, V. C.Patil, S. R. Sawant, R. R. Mudholkar, “Classifiacation and Comparison of Routing Protocols in Wireless Sensor Networks,” Special Issue on Ubiquitous Computing Security Systems, 2009, Vol. 4, Issue 2, pp. 704-711.

[5] R. Yadav, S. Varma, N. Malaviya, “A Survey of MAC Protocols for Wireless Sensor Networks,” UbiCC Journal, 2009, Vol. 4, Issue 3, pp. 827-833.

[6] W. Heinzelman, A. Chandrakasan, H. Balakrishnan, “An Application-Specific Protocol Architecture for Wireless Microsensor Networks,” IEEE Trans. Wireless Commun., 2002, Vol. 1, Issue 4, pp. 60-70.

[7] N. Sadagopan, B. Krishnamachari, A. Helmy, “Active Query Forwarding in Sensor Networks,” Ad Hoc Networks, 2005, Vol. 3, Issue 1, pp. 91-113.

[8] Nikolas A, Pantazis, Stefanos, et.al., “Energy Efficient Routing Protocols in Wireless Sensor Networks : A Survey”, *IEEE Communication Surveys and Tutorials,* Volume 15, Issue 2, Second Quarter 2013, pp. 551-554, 2013.