Appliance Remote Control Using Arduino

D. Anusha
Asst.Prof M.Tech (Power Electronics & Drives) Gokaraju Rangaraju Institute of Engineering & Technology, Bachupally ,Hyderabad-500032, AP.

PM.Sarma
HOD (EEE), Gokaraju Rangaraju Institute of Engineering & Technology, Bachupally, Hyderabad-500032, AP

M.N. SandhyaRani
Asst. Prof B.Tech (EEE), Gokaraju Rangaraju Institute of Engineering & Technology, Bachupally, Hyderabad-500032,AP.

Abstract— In our day to day life every appliance electrical or non-electrical is to be controlled. For example, an electrical fan needs a regulatory system to control its speed or a switch to turn it on or off as required. In such circumstances, person may not be available to control the appliance or device manually. These types of problems can be solved using remote control technique where the user can perform controlling as well as switching operation using a remote controller. In this paper "Appliance Remote Control" we are discussing how to control a set of electrical appliances from a reasonable distance by setting up a remote control system using Arduino-Zigbee boards.

Keywords — Remote, Arduino Boards, Zigbee Shields.

I. Introduction

In modern busy society it would be very useful if people can operate their domestic electrical appliances when they are away from them. The remote control of electrical appliances allows the user to interact with their appliances without touching them i.e. these controls give you the convenience of powering electrical and electronic devices in your house from the control of your couch. The convenience of remote control is now available in an easy to install technology. This new system will wirelessly switch on or off any combination of appliances or outlets from a portable remote or with a control panel by your beside table, workstation, kitchen countertop or anywhere else in the house.

In any automatic system the appliances can be operated using a remote. The basic operational process of controlling of any appliance using arduino is shown in Figure-1.

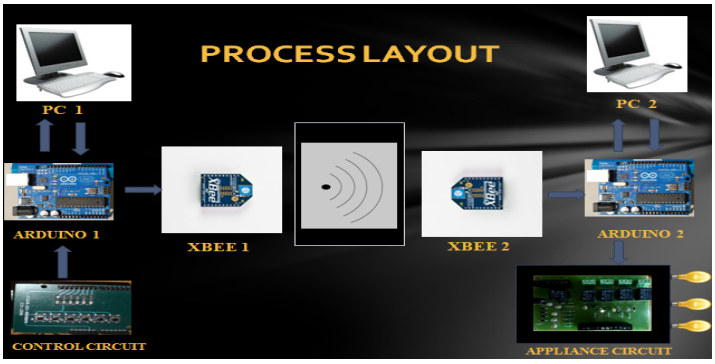

Figure-1

The block diagram consists of a PC, two arduino kits and RF shield. One arduino kit acts as a transmitter whereas other acts as a receiver. RF shield provides a wireless medium to carry signals from transmitter to receiver. When the input is given to PC, it is transmitted to first arduino (transmitter) and then receiver arduino receives the signals through RF shield. These digital signals are then further processed using different types of circuits.

Arduino is an open-source electronics prototyping platform based on flexible, easy-to-use hardware and software. It's intended for artists, designers, hobbyists, and anyone interested in creating interactive objects or environments. Arduino can sense the environment by receiving input from a variety of sensors and can affect its surroundings by controlling lights, motors, and other actuators. Arduino is a single-board microcontroller designed to make the process of using electronics in multidisciplinary projects more accessible. The hardware

consists of a simple open source hardware board designed around an 8-bit Atmel AVR microcontroller, though a new model has been designed around a 32-bit Atmel ARM. The software consists of a standard programming language compiler and a boot loader that executes on the microcontroller.

The Arduino integrated development environment (IDE) is a cross-platform application written in Java, and is derived from the IDE for the Processing programming language and the Wiring projects. It is designed to introduce programming to artists and other newcomers unfamiliar with software development. It includes a code editor with features such as syntax highlighting, brace matching, and automatic indentation, and is also capable of compiling and uploading programming to the boards with a single click. Arduino programs are written in C or C++.It has 14 digital input/output pins (of which 6 can be used as PWM outputs), 6 analog inputs, a 16 MHz ceramic resonator, a USB connection, a power jack, an ICSP header, and a reset button. It contains everything needed to support the microcontroller; simply connect it to a computer with a USB cable or power it with a AC-to-DC adapter or battery to get started.

The Uno differs from all preceding boards in that it does not use the FTDI USB-to-serial driver chip. Instead, it features the Atmega16U2 (Atmega8U2 up to version R2) programmed as a USB-to-serial converter. The Arduino Uno can be powered via the USB connection or with an external power supply. The power source is selected automatically. External (non-USB) power can come either from an AC-to-DC adapter (wall-wart) or battery. The adapter can be connected by plugging a 2.1mm center-positive plug into the board's power jack. Leads from a battery can be inserted in the Gnd and Vin pin headers of the POWER connector. The board can operate on an external supply of 6 to 20 volts. If supplied with less than 7V, however, the 5V pin may supply less than five volts and the board may be unstable. If using more than 12V, the voltage regulator may overheat and damage the board. The recommended range is 7 to 12 volts. Arduino uno board is given in the Figure-2.

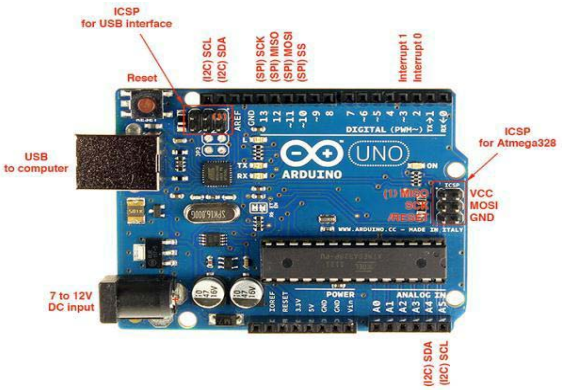

Figure-2

II.WIRELESS TRANSMISSION

The Arduino Uno has a number of facilities for communicating with a computer, another Arduino, or other microcontrollers. In order to control various devices using remote i.e. for wireless transmission, a wireless shield known as xbee is used. **Xbee** is a device which is used to for wireless transmission between transmitter and receiver. It converts digital input given to it into electromagnetic waves of radio frequency which travels through some distance and vice versa

For interfacing one arduino with another arduino , a wireless shield xbee is placed between two arduino kits. One arduino kit acts as a transmitter whereas other acts as a receiver. RF shield provides a wireless medium to carry signals from transmitter to receiver. When the input is given to PC, it communicates serially with the first arduino. The first arduino acts as a transmitter. The Second arduino is configured as a receiver after placing the xbee shield on it. These digital signals are then further processed using different types of circuits. The circuit of the xbee shields are shown below in Figure 3.

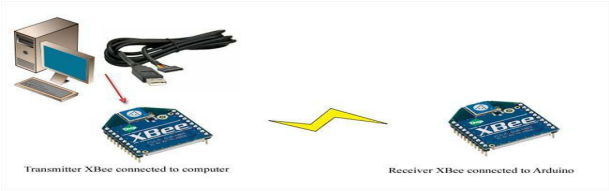

Figure-3

When connecting Arduino to Xbee for serial communications , we must allow for the the fact that the Xbee runs on 3.3V and the Arduino runs on 5V.Below is a simple interface that is recommend as a minimum requirement in Figure 4. The 3.3V output from the Xbee's TX pin will be accepted by the Arduino's 5V logic without any problem. The series resistor simply protects the Xbee TX pin in case your program converts the RX input into a digital output. The 5V output of the Arduino's TX pin is divided by the 4K7 and 7K5 resistors to just over 3V.

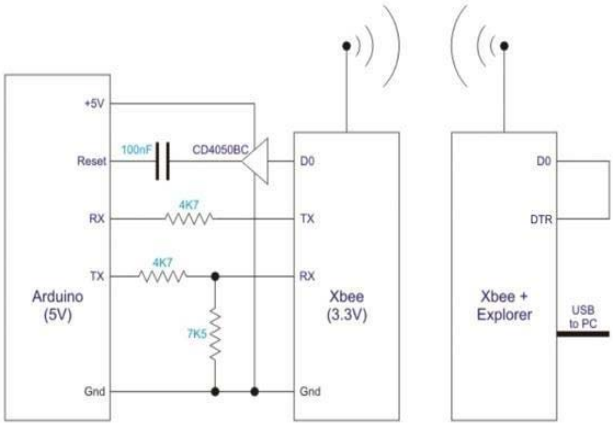

Figure-4

From Figure-4 the DTR output from the USB interface is connected to the reset pin of the Arduino by a 100nF series capacitor. To do this wirelessly we will take advantage of the Xbee's digital I/O pins and a technique called "I/O line passing". In this we use I/O pin 0. Unfortunately the Xbee's 3.3V digital output won't reset the Arduino without some help. We need the capacitor to have a 5V to 0V drop to reset the MCU. As the Xbee can transmit several digital I/O pins the CD4050BC can translate 5 additional 3.3V digital outputs to 5V logic. The unused inputs of the buffer should be tied to ground.

III . SOFTWARE SIMULATION & RESULTS

The programming is carried out using Labview Interface Arduino. LabVIEW is a graphical programming environment used by millions of engineers and scientists to develop sophisticated measurement, test, and control systems using graphical icons and wires that resemble a flowchart. Through the LabVIEW Interface for Arduino Toolkit, we can now leverage all of the benefits of LabVIEW graphical programming for our Arduino project.

The LIFA (LabVIEW Interface for Arduino) toolkit is a free download which allows a LabVIEW developer to easily get data to and from the ever-popular Arduino microcontroller. The basic architecture behind it is that there is an I/O engine programmed to the Arduino which waits for serial commands from LabVIEW and responds with the requested data or action. The Labview consists of two panels.(Front panel & Block diagram).

Front panel consists of five switches. One acts as master switch and four for the respective slave switches. The output of these switches is fed to the Led’s from arduino through USB cable. The MAIN switch is the master switch which has control on the remaining four switches .i.e in order to make any Led work, the master switch must be switched ON. Once the master is switched ON, any load can be controlled using remaining switches. All the loads can also be turned OFF by turning OFF the Master switch. The Block diagram panel is shown in the Figure-5

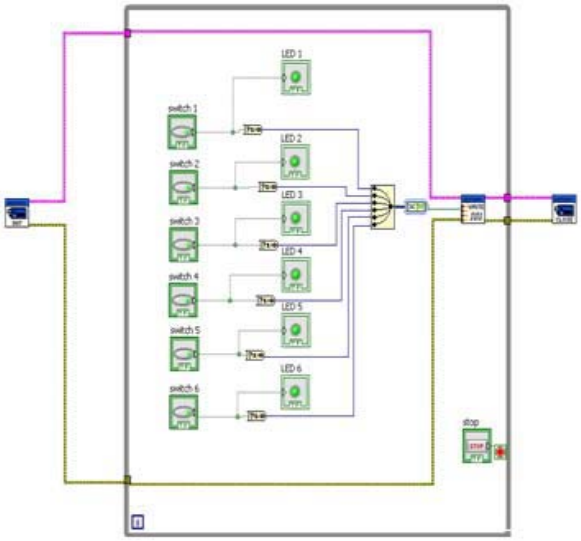

Figure-5

Once the Program is run in the Labview interface arduino the results are obtained in the Front panel i.e showed in the Figure-6.When the switch 1 is on the corresponding LED 1 is on. In the similar fashion whenever the switches are on the corresponding Led's are turned on.

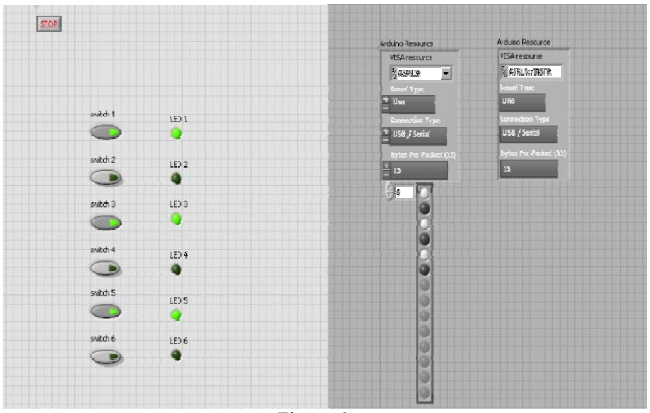

Figure-6

IV.HARDWARE IMPLEMANTATION

The Hardware implementation is carried out by using Arduino, Xbee's, Relay Circuit panel and Load. Controlling of various loads is obtained using Relay circuit (Figure-7). A relay circuit is typically a smaller switch or device which drives (opens/closes) an electric switch that is capable of carrying much larger current amounts. To control the operation of various loads (in this case bulbs are the load). The circuit consists of five relays. Among these relays one is the MAIN relay and remaining are the slave relays which are connected to respective loads. The MAIN relay is the master relays which have control on the remaining four relay. So master relay is always kept switched ON. Once the master relay is ON , any load can be controlled using REMOTE.

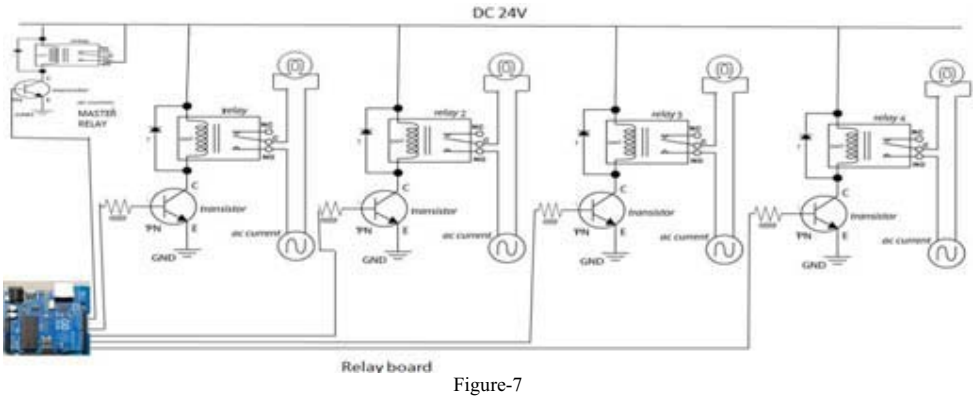

Figure-7

Arduino Uno is designed in a way that allows it to be reset by software running on a connected computer Labview is used for interfacing PC with arduino kit. The interfacing of arduino with PC is done through a USB cable. A program is designed in the Arduino in such a way that the switches control their respective relays which controls their respective loads. Here in our project, bulbs are used as electrical loads. The programming is as shown in the Figure 8.

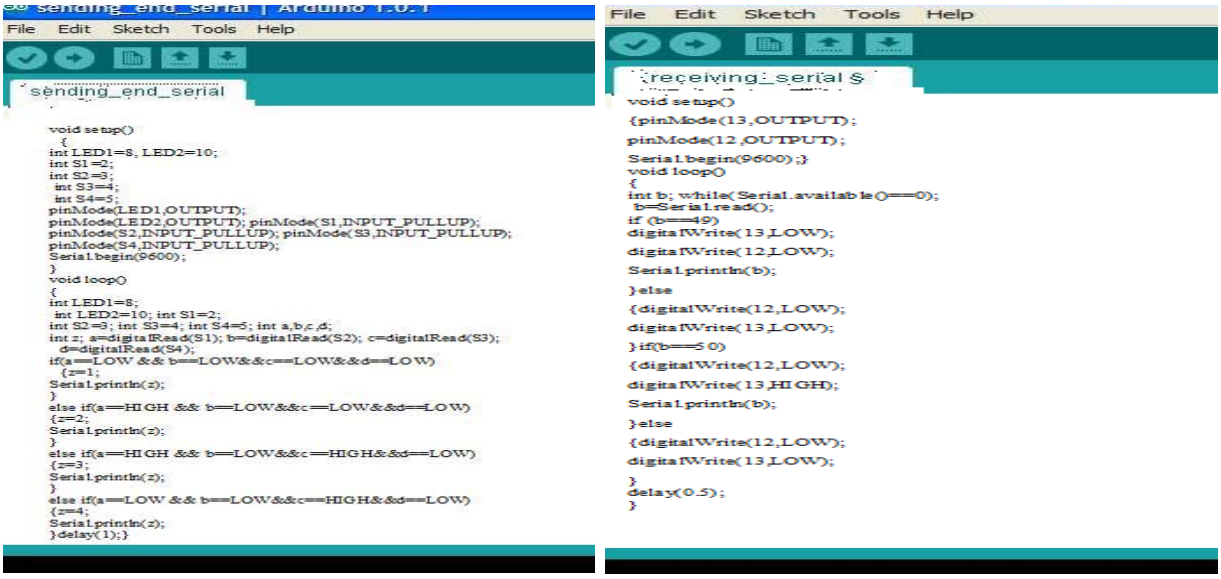

Figure-8 (Sending End & Receiving End)

The entire setup for appliance remote control consists of a transmitter, receiver, relay board and various loads is shown in the figure 9.

Figure-9

From figure 9 we can observe Personal computer, Arduino, Relay shield, Load (lamps) and Xbee shields for both transmitting and receiving. Whenever a switch on the transmitter side(which acts as a remote control) is pressed a signal is transmitted to the receiver. The programming is done in such a way that on pressing a

particular button on sending end arduino a particular bulb glows in the appliance circuit, at the receiving end, till the button is released. Suppose if the switches two and four are pressed then according to the program number 3 is transmitted to the receiver side. On releasing the button the bulb which had been glowing is tuned off, the distance between the two the Arduino's is about 5meters. The receiver arduino accepts the ascii value of 3 that is 51 and it is printed on the serial monitor of the receiving side. The results displayed are shown in the figures 10a,10b.

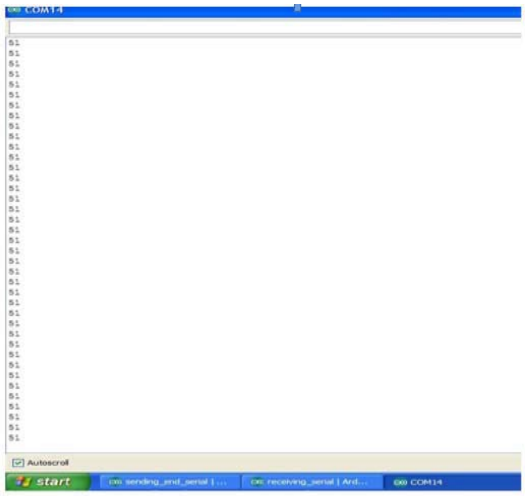

Figure-10a, 10b

The respective relays are connected to the twelfth and thirteen pin of receiving arduino. Whenever it accepts the signal from transmitter, according to the program the respective loads will be operated depending on the switch pressed shown in the figurer-11a,11b.

Figure-11a, 11b

The components used in this project are listed in the Table-1.

S-no	Component	Quantity
1	Transistors(2N222,BC107)	8
2	Relay -JQC-3FF (10A,277V AC)	8
3	Resistors (10k)	10
4	Diodes IN4007	12
5	Adaptor,5V	1
6	Bulbs	4
7	Screw terminals - 3pin,2pin	6

8	Xbee shields	2
9	Arduino-Uno	2
10	Lamps(Load)	6

Table-1

V. CONCLUSIONS

Remote control of appliances is obtained using Arduino. The signals are transmitted wireless with in a range of 100 meters. This project uses an arduino UNO board with a microcontroller (ATmega 328) of clock speed 16MHz. A Xbee shield module which can communicate upto 100 feet indoor and 300 feet outdoor. The aspects of the project make it very adaptable in workshops as well as household purpose. Here we have controlled incandescent lamp with in a range of 5meters from the PC almost instantaneously.

VI.FUTURE SCOPE

Xbee can receive or Transmit data within the range of metres, so this project finds major applications in large scale industries, farms to operate, used for military purposes during war times.

REFERENCES

[1] Arduino Cookbook by Michael Margolis
[2] Beginning Arduino Programming By Brian Evans
[3] "XBee Wireless Sensor Networks for Temperature Monitoring" by Vongsagon Boonsawat, Jurarat Ekchamanonta, Kulwadee Bumrungkhet, and Somsak Kittipiyakul Sirindhorn International Institute of Technology, Thammasat University, Pathum-Thani, Thailand .
[4] Arduino – Home Page. (2007, June 15).
[5] Power Electronics By Rashid & Ahmed.