Lapse Based Techniques for Object Dimensions over Sensor Networks with the Orientation of MLE and EKF

N.Bhavani
Assistant Professor,Department of MCA , St.Anns's College of Engineering & Technology, Chirala, Prakasam(dt), Andhra Pradesh, India

Ch.Saravana Kumar
Assistant Professor,Department of MCA , St.Anns's College of Engineering & Technology, Chirala, Prakasam(dt), Andhra Pradesh, India

P.Sri Divya
Assistant Professor,Department of MCA , St.Anns's College of Engineering & Technology, Chirala, Prakasam(dt), Andhra Pradesh, India

Abstract -In this paper, we address the problem of tracking the Object based on Lapse Based dimensions with the in-corporation of Maximum Likelihood Estimator and the Extended Kalman Filter Technique The vision and sensor fusion techniques described in this paper and provide a measurement of target locations for each image frame. In its raw form, this information is of limited use for camera control because it is imprecise due to measurement noise; it may include false-positive detections of people; and it provides no association between new measurements and previous target locations. This makes it difficult to develop smooth camera control motions from the raw measurements. In addition, the data is in polar coordinate which complicates the task of associating the data with other sensors or devices in the room that may not share the same coordinate system. For these reasons, target measurements are converted to a global Cartesian coordinate system, associated with previously tracked targets, and used to update a filter/state estimator for each target track. In this paper we illustrate the tracking of target positions in Cartesian coordinates. The Captured Target Contains position estimates, and the relative uncertainty of the estimated position in three dimensions like Coordinate Transformation, Data Association ,MLE and Kalman Filter.

Key words: Target Tracking, Wireless Sensor Networks Elements , Extended Kalman Filtering, Coordinate Transformations, Maximum Likely hood Estimator.

I. SENSOR NETWORKS

Wireless sensor network (WSN) refers to a group of spatially dispersed and dedicated sensors for monitoring and recording the physical conditions of the environment and organizing the collected data at a central location. WSNs measure environmental conditions like temperature, sound, pollution levels, humidity, wind speed and direction, pressure, etc.

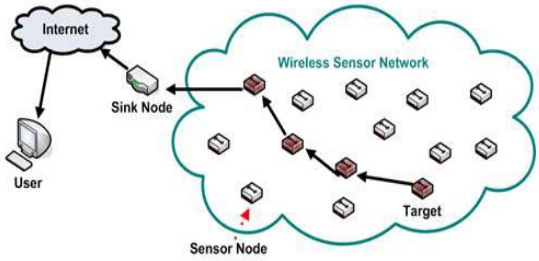

Fig:1 Sensor Networks

A WSN consists of anywhere from a few hundreds to thousands of sensor nodes. The sensor node equipment includes a radio transceiver along with an antenna, a microcontroller, an interfacing electronic circuit, and an energy source, usually a battery. The size of the sensor nodes can also range from the size of a shoe box to as small as the size of a grain of dust. As such, their prices also vary from a few pennies to hundreds of dollars depending on the functionality parameters of a sensor like energy consumption, computational speed rate, bandwidth, and memory.

Sensor networks are composed of a large number of small nodes with sensing, computation, and wireless communication capabilities. In sensor networks, sensor nodes are usually scattered and the position of sensor nodes needs not be predetermined. It means that sensor network protocols and algorithms must provide self-organizing capabilities. Another feature of sensor networks is the coordination of sensor nodes to produce high-quality information about the sensing environment.

The features of sensor networks provide a wide range of applications such as health, military, and home. The realization of these and other sensor network applications require wireless ad-hoc networking techniques. Although many protocols and algorithms have been proposed for traditional wireless ad-hoc networks, they are not well suited to the unique features and application requirements of sensor networks. Therefore, many routing and data dissemination protocols should be designed for sensor networks where the following issues should be considered

- ✓ Energy Awareness
- ✓ MAC for Wireless Sensor Networks
- ✓ Time Synchronization
- ✓ Power-saving Mode of Operation Routing

Sensor Node Characteristics

A sensor node, also known as a mote is a node in a wireless sensor network that is capable of performing some processing, gathering sensory information and communicating with other connected nodes in the network. A mote is a node but a node is not always a mote. Although wireless sensor nodes have existed for decades and used for applications as diverse as earthquake measurements to warfare. NASA Sensor Webs Project One of the objectives of the Smart dust project was to create autonomous sensing and communication within a cubic millimeter of space.

They include major research centers in Berkeley NEST and CENS The researchers involved in these projects coined the term mote to refer to a sensor node. The equivalent term in the NASA Sensor Webs Project for a physical sensor node is pod, although the sensor node in a Sensor Web can be another Sensor Web itself. The below diagram is the typical architecture of the sensor
node.

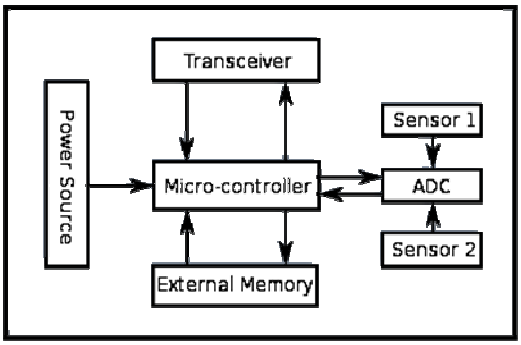

Fig: 2 Architecture of the Sensor Node

Components

The main components of a sensor node are a microcontroller, transceiver, external memory, power source and one or more sensors.

Micro Controller

The controller performs tasks, processes data and controls the functionality of other components in the sensor node. While the most common controller is a microcontroller, other alternatives that can be used as a controller are: a general purpose desktop microprocessor, digital signal processors, FPGAs and ASICs. A microcontroller is often used in many embedded systems such as sensor nodes because of its low cost, flexibility to connect to other devices, ease of programming, and low power consumption.

Transceiver

Sensor nodes often make use of ISM band, which gives free radio, spectrum allocation and global availability. The possible choices of wireless transmission media are radio frequency (RF), optical communication (laser) and infrared. Lasers require less energy, but need line-of-sight for communication and are sensitive to atmospheric conditions. Infrared, like lasers, needs no antenna but it is limited in its broadcasting capacity. Radio frequency-based communication is the most relevant that fits most of the WSN applications.

External memory

From an energy perspective, the most relevant kinds of memory are the on-chip memory of a microcontroller and Flash memory—off-chip RAM is rarely, if ever, used. Flash memories are used due to their cost and storage capacity. Memory requirements are very much application dependent. Two categories of memory based on the purpose of storage are: user memory used for storing application related or personal data, and program memory used for programming the device.

Power source

A wireless sensor node is a popular solution when it is difficult or impossible to run a mains supply to the sensor node. However, since the wireless sensor node is often placed in a hard-to-reach location, changing the battery regularly can be costly and inconvenient. An important aspect in the development of a wireless sensor node is ensuring that there is always adequate energy available to power the system. The sensor node consumes power for sensing, communicating and data processing. More energy is required for data communication than any other process. The energy cost of transmitting 1 Kb a distance of 100 meters (330 ft) is approximately the same as that used for the execution of 3 million instructions by a 100 million instructions per second/W processor. Power is stored either in batteries or capacitors. Batteries, both rechargeable and non-rechargeable, are the main source of power supply for sensor nodes.

Sensors

Sensors are hardware devices that produce a measurable response to a change in a physical condition like temperature or pressure. Sensors measure physical data of the parameter to be monitored. The continual analog signal produced by the sensors is digitized by an analog-to-digital converter and sent to controllers for further processing. A sensor node should be small in size, consume extremely low energy, operate in high volumetric densities, be autonomous and operate unattended, and be adaptive to the environment. As wireless sensor nodes are typically very small electronic devices, they can only be equipped with a limited power source of less than 0.5-2 ampere-hour and 1.2-3.7 volts.

Sensor Classification

Sensors are classified into three categories: passive, Omni-directional sensors; passive, narrow-beam sensors; and active sensors. Passive sensors sense the data without actually manipulating the environment by active probing. They are self powered; that is, energy is needed only to amplify their analog signal. Active sensors actively probe the environment, for example, a sonar or radar sensor, and they require continuous energy from a power source. Narrow-beam sensors have a well-defined notion of direction of measurement, similar to a camera. Omni-directional sensors have no notion of direction involved in their measurements.

Sensor Applications
Target tracking is one of the most vital applications of WSN in field surveillance, military, habitat monitoring and intruder tracking. There are two steps of object tracking one is Monitoring and second one is Reporting.

Types of Target Tracking Approaches
There are many types of approaches for object tracking like Tree Based Methods, Cluster based , Prediction based and Mobi- Cast Methods . In this Paper we present a new technology for object tracking is Lapse Based Technology. This technology is using the method like Maximum Likelihood Estimator **(MLE)** and Extended Kalman Filter Methods. (**EKF).**

II. KALMAN FILTER TECHNIQUE

A Kalman filter is an optimal estimator - ie infers parameters of interest from indirect, inaccurate and uncertain observations. It is recursive so that new measurements can be processed as they arrive. The process of finding the "best estimate" from noisy data amounts to "filtering out" the noise. However a Kalman filter also doesn't just clean up the data measurements, but also projects these measurements onto the state estimate. If all noise is Gaussian, the Kalman filter minimizes the mean square error of the estimated Parameters.
Given only the mean and standard deviation of noise, the Kalman filter is the best linear estimator. Non-linear estimators may be better.

1) *Formulating a Kalman Filter Problem:*

We require discrete time linear dynamic system description by vector difference equation with additive white noise that models unpredictable disturbances.

Definition - the state of a deterministic dynamic system is the smallest vector that summarizes the past of the system in full. Knowledge of the state allows theoretically prediction of the future (and prior) dynamics and outputs of the deterministic system in the absence of noise.

2) *State equation:*

$$X(k+1)=F(k)x(k)+G(k)u(k)+v(k) \quad k=0,1,..$$

Where X(k) is the dimensional state vector(k) is the n_x dimensional known input vector(k) is (unknown) zero mean white process noise with covariance

$$E[V(k)V(k)^{|}]=Q(k)$$

3) *Measurement equation:*

$$Z(k)= (k)\ (k)+ (k)\ k=1,2,\ldots$$

W(k) is unknown zero mean white measurement noise with unknown covariance

$$E[V(k)V(k)^{|}]=R(k)$$

In target tracking using distance measurements, the sensors which can detect the target measure their distances to the target and transmit the information to a leader (either a sensor or a separate computing unit). The leader estimates (updates) the current state of the target based on the received measurements and the target history, and reports the tracking results to the system's users. Since the measurements are usually nonlinear functions in the target state (which typically consists of the position and velocity of the target), the extended Kalman filters (EKFs) have been proposed in many papers for target tracking in wireless sensor networks. A self-organized distributed target tracking technique with sensor collaborations based on EKF algorithms.

In Kaplan presented a global sensor selection approach which was integrated with a decentralized bearings-only EKF tracker. Different sensor scheduling approaches proposed for target tracking in wireless sensor networks also employ EKF-based target state estimators, examples include the multistep adaptive sensor scheduling algorithm

(MASS) EKF-based adaptive sensor scheduling method and EKF-based distributed adaptive multisensory scheduling scheme for energy efficiency.

The resulting corresponding covariance matrix of the state estimate error is further utilized to select the next tasking sensor (s) and/or the sampling interval for sensors. The EKF algorithms are derived through first linear state and the nonlinear state and measurement equations around the latest state estimate and the predicted state, respectively, and then applying the standard Kalman filter [However, a significant drawback of the EKF algorithms is that the resulting state estimate may seriously diverge from the actual state [26] in many applications. In target tracking applications, target dynamics are usually linearly modeled in the Cartesian coordinates, while the measurements are nonlinear functions in the target state.

III. MAXIMUM LIKELIHOOD ESTIMATOR (MLE)

Maximum likelihood is a very general method for estimation of model parameters. It has good properties in large samples and when a valid model is used. Therefore it has to be accompanied by a method that addresses model uncertainty. In this chapter, we give details of the method of maximum likelihood and compare two approaches to dealing with model uncertainty—selecting a model and combining estimators based on the alternative models. The Likelihood is defined as the joint density or probability of the outcomes with the roles of the values of the outcomes y and the values of the parameters Theta, interchanged.

The maximum likelihood estimation methods are also popular for target or sensor localization in wireless sensor networks with different types of measurements. The localization problems based on maximum likelihood estimation are nonlinear optimization which is difficult to obtain a close form solution. Various numerical methods have also been proposed in these papers for the global optimization solution, including multi-resolution search algorithm, and expectation-maximization (EM) like iterative algorithm [particle swarm optimization technique etc. The iterative conjugate-gradient scheme and the Newton- Raphson iterative method have also been applied to solve this nonlinear optimization problem. Unless the initialized value of the MLE is close to the correct solution, it is possible that this maximization search may not find the global maxima. Because our algorithm also utilizes Kalman predictor, much better initialization is provided.

IV. PROBLEM FORMULATION

we only consider the problem of tracking a single target moving in a two-dimensional field covered by a wireless sensor network. When the target moves through the monitored area, the sensors which have detected the target form a cluster [38], [39], [40] and one of them is selected to be the leader which serves as the center of signal and information processing. It is assumed that the leader knows the position of every sensor.

The cluster members measure their distances to the target and transmit the measurements with other information, such as its identity (ID) and the corresponding time stamps, to the leader. It is assumed that there is no transmission delay or packet loss. After receiving all the measurements, the leader will compute an estimate of the state (position and velocity) of the target. A target moving in a two-dimensional field is usually described by its position and velocity in the X-Y plane

$$x_k=[x(k)\ v_x(k)\ y(k)\ v_y(k)]^T,$$

where $(x(k),y(k))$ are the position coordinates of the target along X- and Y- directions at time t_k, respectively, and $(v_x(k)\ v_y(k))$ are the velocities of the target along X- and Y- directions at time t_k , respectively. The following nearly constant-velocity (CV) model is adopted to represent the motion of the target

$$\boxed{x_{k+1}=F_k x_k+G_k w_k\ ,} \qquad (1)$$

where

$$F_k=\begin{bmatrix} 1 & \Delta t_k & 0 & 0 \\ 0 & 1 & 0 & 0 \\ 0 & 0 & 1 & \Delta t_k \\ 0 & 0 & 0 & 1 \end{bmatrix},\ G_k=\begin{bmatrix} \frac{\Delta t_k^2}{2} & 0 \\ \Delta t_k & 0 \\ 0 & \frac{\Delta t_k^2}{2} \\ 0 & \Delta t_k \end{bmatrix}$$

In the above $\Delta t_k=t_{k+1}-t_k$, is the sampling time interval between the successive measurement times $t_{k+}1$ and t_k ,

$W_k=[w_x\ w_y]^T$ is a white Gaussian noise sequence with zero mean and covariance matrix Q_w and W_x and W_y correspond to noisy accelerations along the X- and Y- axis respectively. In this paper we assume that W_x is uncorrelated with W_y for simplicity, and Q_w is given by

$$Q_w=\begin{bmatrix}\sigma^2_{w_x} & 0\\ 0 & \sigma^2_{w_y}\end{bmatrix}$$

We assume that all the sensors are of the same type and have the same noise noise statistics.Denote by $z_i(k)$ the distance measurement to the target obtained by sensor i at the t_k.To simply our notation , the dependence on the time t_k is suppressed in the sequel,e.g., $z_i(k)$ is simplified to be z_i..

Let r_i be the true distance between sensor i and the target,we have

$$r_i=\sqrt{(x-x^2)^2+(y-y^2)^2}$$

Where (x^i,y^i) is the known location of sensor i, and (x,y) is the unknown position of the target at time t_k.The measurement model we adopt is represented in the following form of additive and multiplicative noises

$$Zi= (1+\gamma i)ri+ni = ri+ui. \qquad (2)$$

Where n_i and γ_i are the additive and multiplicative Gaussian noises of sensor i with means μ_n and μ_γ. It is normally assumed that these two types of noises are uncorrelated.The use of multiplicative noise motivated
by the fact that measurement error increases roughly linearly as a function of distance for many distance sensors. Indeed, relative errors are commonly used in abburacy specifications.

The total noise if sensor i, denoted by $u_i=n_i+r_i.\gamma_i$ is also a Guassian noise with mean $\mu_i=\mu_n+r_i$.
μ_γ and covariance $\sigma_i^2= \sigma_n^2+ \sigma_\gamma^2$.
According to (2), the conditional probability density function (PDF) of the measurement z_i, given (x,y) , is written as follows

$$P(z_i|x,y)=\frac{1}{\sqrt{2\pi\sigma_i}}\exp\left\{-\frac{(z_i-r_i-\mu_i)^2}{2\sigma_i^2}\right\}$$
$$=\frac{1}{\sqrt{2\pi\sigma_i}}\exp\left\{-\frac{[r_i-(z_i-\mu_i)]^2}{2\sigma_i^2}\right\} \qquad (3)$$

V. CONCLUSION:

In our presentation , we have to offered a new approach for target tracking in a such a way that is target tracking in WSN is done in efficient way by combining maximum likelihood estimation and Kalman filtering using the Lapse Based Dimensions. This New Approach reduces the average energy consumed by sensor nodes and thereby increase the lifetime of the wireless network. The proposed System is very simple and however it is efficient.

VI. FUTURE SCOPE:

In our Next appearance, We may also examine the security issues and predicament examination for the Maximum Likelihood Estimator. We can analyze sensible and geometric calculations for Extended Kalman Filter Technique. We can also calculate the object dimensions for tracing of Object in Lapsed Based Methods from the Sensor object image point of calculations.

VII. ACKNOWLEDGMENTS

In our work progress the DEPT of CSE was supported and helpful for using their Laborites for geometric calculations on dimensions of Objects by using MLE and EKF.

REFERENCES:

[1] Analysis for the Crypto-Logic Riddles. Sensor Node Characterization: NetworkCharacteristics and Power UsageBenchmarking b y Viven Rajendra C.
[2] Target Tracking using Sensor Networkswith Fault Tolerance bySania Bhatti
[3] http://en.wikipedia.org/wiki/File:Sensornode.svg
[4] Sensor characteristics by Intelligent Sensor Systems Ricardo Gutierrez-OsunaWright State University
[5] Wireless Sensor Network Protocols by Mark A. Perillo and Wendi B. Heinzelman
[6] communication-efficient tracking model selection methods for multi-model based object tracking
[7] sensor networks- by Ding-Chau Wang, Chao-Chun Chen and Chien-Han Liao
[8] tracking of moving object in wireless sensor network -d.charanya & g.v.uma