Transient Stability Analysis of Renewable Energy System with Grid Interfacing at PCC

Vikas Jain
Department of Electrical Engineering
Pacific University, Udaipur, Rajasthan, India

Ravi Prakash
Department of Electrical Engineering
MNIT, Jaipur, Rajasthan, India

Naveen Sen
Department of Electrical Engineering
Pacific University, Udaipur, Rajasthan, India

Pradeep Anjana
Department of Electrical Engineering
MNIT, Jaipur, Rajasthan, India

Abstract—This paper describes dynamic modeling and simulation results of a renewable energy based hybrid power system. The various energy sources such as wind/FC are modelled individually and latterly integrated to form a hybrid system. The developed Simulink model of hybrid system is then connected to 11KV grid through an AC bus. The modeling of hybrid wind/ FC DG system and there affect on grid stability is addressed in this paper. Dynamic models for the main system components, namely, wind energy conversion system (WECS), and fuel cell, are developed with the help of Matlab/Simulink software. Simulation studies have been carried out to verify the system performance under fault condition.

NOMENCLATURE

ρ	density of air .
v	upstream wind velocity at the entrance of the rotor blades
v_0	downstream wind velocity at the exit of the rotor blades
K_m	mass flow rate
A	area swept by the rotor blades.
C_p	power coefficient of the rotor
R	rotor blade radius
ω	rotor angular speed.
h	Planck's constant
c	velocity of light
I_{pv}	Photovoltaic current
$I_{pv,n}$	Light-generated current at nominal condition
K_i	Current temperature co-efficient
G, G_n	Actual and Nominal sun irradiation
I_0	Reverse saturation current
ΔT	difference between actual temperature and nominal temperature
u	Diode ideality factor
V_T	Junction thermal voltage

η_{ohmic} Ohmic over voltage ;

I. INTRODUCTION

Nowadays many applications in rural and urban areas use hybrid systems. The power system in this study consists of a solar photovoltaic (PV) array; wind turbine and proton exchange membrane (PEM) fuel cell (FC). These components have very different characteristics. But when they are engineered properly, they can work together to generate power in a sustainable and reliable way. Fuel cell and wind together can supply constant power to some extent. However, because of the intermittency nature of these two sources, the power will not be delivered to load at a constant rate, so there will be either excess or deficit of electric power. In the case of positive balance the excess electricity is converted to hydrogen in an electrolyzer, and when the electricity balance is negative then the fuel cell will supply the deficits. Reliable electricity supply cannot be ensured because of the intermittent nature of renewable energy sources. Therefore, wind, solar and FC hybrid systems, which combine conventional and renewable sources of energies, are a better choice for isolated loads.

1.1 Wind Generation As A Source Of Renewable Energy

Wind energy is a renewable source of electricity obtained by converting the kinetic energy that is present in the moving air into electricity [3]. It is also a clean energy source that is, operating without producing carbon dioxide, sulfur dioxide, particulates, or any other type of air pollution. As a result, the popularity of wind energy is growing exponentially. In the last decade, wind has become the fastest growing energy source, gaining more and more acceptance, interest and use on an international level. This trend makes it possible to build larger wind farm and generate more power. By 2005, the worldwide capacity had been increased to 58,982 megawatts and World Wind Energy Association expects 120,000 MW to be installed globally by 2010.

1.2 Fuel Cell Generation As A Source Of Renewable Energy

Fuel cell is one of the most significant energy sources of near future it converts chemical energy into electrical energy. Polymer electrolyte membrane (PEM) fuel cells are the most popular type of the fuel cells. This fuel cell use generally hydrogen and oxygen as the fuel. These fuels can either be directly fed into the fuel cell, or sent to a reformer to extract pure hydrogen, which is then directly fed to the fuel cell.

II. FUNDAMENTALS OF ALTERNATIVE ENERGY SYSTEMS

In this section, the fundamentals of wind energy generation system, PV cells and fuel cells are reviewed.

2.1 Wind Energy System

Wind energy systems harness the kinetic energy of wind and convert it into electrical energy or use it to do other work, such as pump water, grind grains, etc. The kinetic energy of air of mass moving at speed can be expressed as

$$E_k = \frac{1}{2} mv^2 \qquad 1$$

During a time period t, the mass (m) of air passing through a given area *A* at speed is:

$$m = \rho A v t \qquad 2$$

Based on the above two equations, the wind power is

$$P = \frac{1}{2} \rho A v^3 \qquad 3$$

The specific power or power density of a wind site is given as

$$P_{den} = \frac{P}{A} = \frac{1}{2} \rho v^3 \qquad 4$$

It is noted that the specific power of a wind site is proportional to the cube of the wind speed.

a) Power Extracted From Wind

The actual power extracted by the rotor blades from wind is the difference between the upstream and the downstream wind powers

$$P = \frac{1}{2} K_m (v^2 - v^2_o) \quad 5$$

$$K_m = \rho A \left(\frac{v + v_o}{2}\right) \quad 6$$

From (5) and (6), the mechanical power extracted by the rotor is given by:

$$P = \frac{1}{2} \rho A \left(\frac{v + v_o}{2}\right)(v^2 - v^2_o) \quad 7$$

Let and rearrange the terms in (2.7), we have:

$$P = \frac{1}{2} \rho A v^3 C_p \quad 8$$

is the fraction of the upstream wind power, which is captured by the rotor blades and has a theoretical maximum value of 0.59. In practical designs, maximum achievable is between 0.4 and 0.5 for high-speed, two-blade turbines and between 0.2 and 0.4 for low-speed turbines with more blades [5]. It is noted from (2.8) that the output power of a turbine is determined by the effective area of the rotor blades (*A*), wind speed and wind flow conditions at the rotor . Thus, the output power of the turbine can be varied by changing the effective area and/or by changing the flow conditions at the rotor system. Control of these quantities forms the basis of control of wind energy systems.

b) Tip Speed Ratio

The tip speed ratio (TSR) is defined as the ratio of the linear speed at the tip of the blade to the free stream wind speed, is given as follows [5]:

$$\lambda = \frac{\omega R}{v} \quad 9$$

TSR is related to the wind turbine operating point for extracting maximum power. The maximum rotor efficiency is achieved at a particular TSR, which is specific to the aerodynamic design of a given wind turbine. For variable TSR turbines, the rotor speed will change as wind speed changes to keep TSR at some optimum level. Variable TSR turbines can produce more power than fixed TSR turbines.

c) Wind Energy Conversion System

The principle components of a modern wind turbine are the tower, the yaw, the rotor and the nacelle, which accommodates the gear box and the generator. The tower holds the main part of the wind turbine and keeps the rotating blades at a height to capture sufficient wind power. The yaw mechanism is used to turn the wind turbine rotor blades against the wind. Wind turbine captures the wind's kinetic energy in the rotor consisting of two or more blades. The gearbox transforms the slower rotational speeds of the wind turbine to higher rotational speeds on the electrical generator side. Electrical generator will generate electricity when its shaft is driven by the wind turbine, whose output is maintained as per specifications, by employing suitable control and supervising techniques. In addition to monitoring the output, these control systems also include protection equipment to protect the overall system [5].

d) Wind Turbine Output Power V/S Wind Speed

When the wind speed is less than the cut-in speed (normally 3-5 m/s), there is no power output. Between the cut-in speed and the rated or nominal wind speed (normally 11-16 m/s), the wind turbine output power is directly related to the cubic of wind speed as given in (8). When the wind speed is over the nominal value, the output power needs to

be limited to a certain value so that the generator and the corresponding power electronic devices (if any) will not be damaged. In other words, when the wind speed is greater than the rated value, the power coefficient needs to be reduced (8). When the wind speed is higher than the cut-out speed (normally 17-30m/s) [4], the system will be taken out of operation for protection of its components.

2.2 Fuel Cells

Fuel cells (FCs) are static energy conversion devices that convert the chemical energy of fuel directly into DC electrical energy. The basic physical structure of a fuel cell consists of two porous electrodes (anode and cathode) and an electrolyte layer in the middle. The electrolyte layer is a good conductor for ions (positive or negative charged), but not for electrons. The electrolyte can either be solid, such as PEMFC and solid oxide fuel cells (SOFC) or liquid, such as molten carbonate fuel cells (MCFC). The type and chemical properties of the electrolyte used in fuel cells are very important to their operating characteristics, such as their operating temperatures. The polarity of an ion and its transport direction can differ for different fuel cells, determining the site of water production and removal. The electrochemical reactions take place at the electrodes to convert chemical energy into electricity. Note that anode is the electrode from which electrons leave (negative) and cathode is the electrode to which the electrons are coming (positive). The most commonly used fuel for fuel cells is hydrogen and the oxidant is usually oxygen or air. Nevertheless, theoretically, any substance capable of chemical oxidation that can be supplied continuously (as a fluid) can be used as fuel at the anode of a fuel cell. Similarly, the oxidant can be any fluid that can be reduced at a sufficient rate. Among different types of fuel cells, SOFC, PEMFC and MCFC are most likely to be used for distributed generation (DG) applications [8]. Compared with conventional power plants, these FCDG systems have many advantages such as high efficiency, zero or low emission (of pollutant gases) and flexible modular structure. In the following, an overview is given on the operating principles of the above three types of fuel cells.

2.2.1.1 PEMFC

The hydrogen molecules are broken into electrons and hydrogen protons at the anode with the help of platinum catalyst. The hydrogen protons pass through the membrane (electrolyte), reach the cathode surface and combine with the electrons, which travel from anode to cathode through the external load, to produce water. One of the advantages of the PEMFC is its high power density and high efficiency (40-45%). This makes the technology competitive in transportation and stationary applications. Another benefit is its lower operating temperature (between 60°C and 80°C) and because of this, the PEMFC has a quick start, which is beneficial in automotive applications where quick start is necessary.

2.2.1.2 SOFC

SOFC is a high temperature fuel cell technology with a promising future. Based on a negative-ion conductive electrolyte, SOFCs operate between and and convert chemical energy into electricity at high efficiency, which can reach up to 65%. The overall efficiency of an integrated SOFC-combustion turbine system can even reach 70%. Despite slow start-up and more thermal stresses due to the high operating temperature, SOFC allows for internal reforming of gaseous fuel inside the fuel cell, which gives multi-fuel capability to SOFCs [8]. Moreover, their solid nature simplifies system designs, where the corrosion and management problems related to liquid electrolyte are eliminated. These merits give SOFC a bright future to be used in stationary applications.

2.2.1.3 MCFC

MCFCs use a molten mixture of alkali metal carbonate as their electrolyte [8]. At high temperatures , the salt mixture is in liquid phase and is an excellent conductor of ions. At the cathode, the oxygen and carbon oxide combine with the electrons flowing through the external circuit to produce carbonate ions . At the anode, ions are deoxidized by hydrogen, and electrons are released at the same time. These electrons will have to go through the external circuit and then reach the cathode surface.

III. MODELLING OF COMPONENTS FOR HYBRID SYSTEM

3.1 Wind Turbine Generator Model

According to the principle of aerodynamics, output power characteristic of wind turbine is described as follows:

$$P_t = \frac{1}{2}\rho\pi\lambda C_p(\lambda,\beta)V^3R^2 \qquad 10$$

The tip-speed ratio of wind turbine is written as:

$$\lambda = \frac{R\omega}{v} \qquad 11$$

The aerodynamic torque can be expressed as:

$$T_a = {}^{1}/_{2}\,\rho\pi C_T(\lambda,\beta)V^2R^3 \qquad 12$$

The torque coefficients which is given by:

$$C_T(\lambda,\beta) = \frac{1}{\lambda}C_p(\lambda,\beta) \qquad 13$$

The fitting functions of is obtained by:

$$C_p(\lambda,\beta) = C_1\left(\frac{C_2}{\lambda_i} - C_3\beta - C_4\right)e^{\frac{C_5}{\lambda_i}} + C_6\lambda \qquad 14$$

$$\frac{1}{\lambda_i} = \frac{1}{\lambda + 0.08\beta} - \frac{0.035}{\beta^3 + 1} \qquad 15$$

Where, ,…, is the undetermined coefficient according to characteristic of wind turbine.

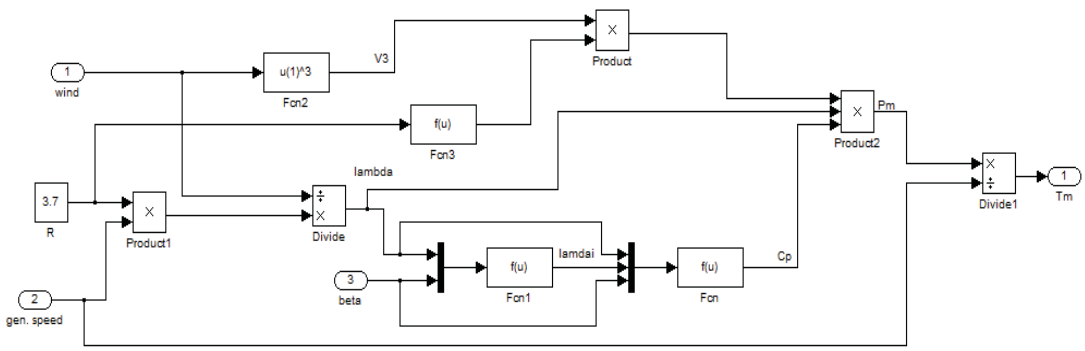

Figure 1: Dynamic model of Wind Turbine

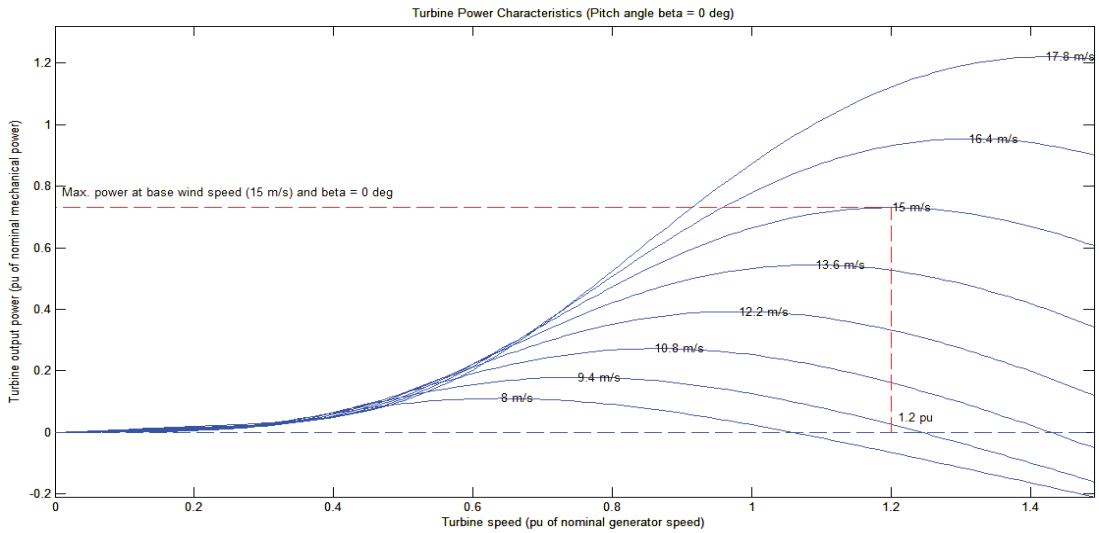

Figure 2: wind turbine characteristics

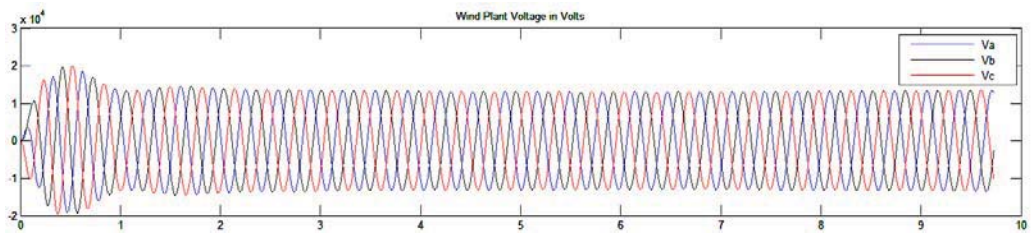

Figure 3: wind plant output voltage

3.2 Induction Generator Model

3.2.1.1 Stator Voltage in Stationary Reference Frame

$$V_0 = \frac{1}{3}(V_a + V_b + V_c) \qquad 15$$

3.2.1.2 Electromechanical Torque developed by machine

$$T_{em} = \frac{3}{2}\frac{P}{2}(\omega_d i_q - \omega_q i_d) \quad N.m \qquad 17$$

3.2.1.3 Stator Winding current in terms of qd component

$$i_a = i_q^s + i_0 \qquad 18$$

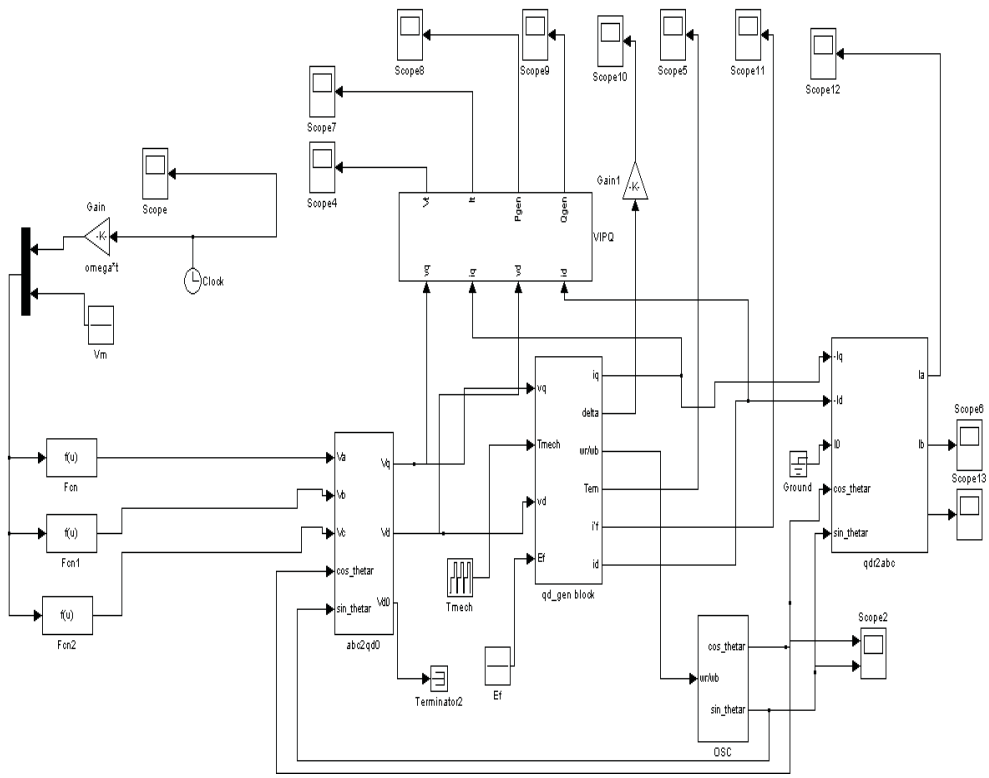

Figure 4: Dynamic Model of I.G

3.3 Fuel Cell Modelling

The PEMFC model designed in MATLAB and Simulink for this study. This model is built using the relationship between output voltage and partial pressure of hydrogen, oxygen and water. Fig. (6) shows the detailed model of the PEMFC, which is then embedded into the SimPower Systems of MATLAB as a controlled voltage source and integrated into the overall system. The relationship between the molar flow of any gas (hydrogen) through the valve and its partial pressure inside the channel can be expressed as [10]

$$\frac{qH_2}{pH_2} = \frac{K_{an}}{\sqrt{MH_2}} = K_{H_2} \qquad 19$$

For hydrogen molar flow, there are three significant factors: hydrogen input flow, hydrogen output flow and hydrogen flow during the reaction [10]. The relationship among these factors can be expressed as

$$\frac{d}{dt}pH_2 = \frac{RT}{V_{an}}\left(q_{H_2}^{in} - q_{H_2}^{out} - q_{H_2}^{r}\right) \qquad 20$$

According to the basic electrochemical relationship between the hydrogen flow and the FC system current, the flow rate of reacted hydrogen is given by [10]

$$q_{H_2}^{r} = \frac{N_0 N_s I_{FC}}{2F} = 2K_r I_{FC} \qquad 21$$

Using (19) and (21) and applying Laplace transform, the hydrogen partial pressure can be obtained in the *s* domain as [10]

$$pH_2 = \frac{1/KH_2}{1 + T_{H_2}}\left(q_{H_2}^{in} - 2K_r I_{FC}\right) \qquad 22$$

Assuming constant temperature and oxygen concentration, the FC output voltage may be expressed as

$$V_{cell} = E + \eta_{act} + \eta_{ohmic} \qquad 28$$

$$\eta_{act} = -B\ln(CI_{FC})$$

$$\eta_{ohmic} = -R^{int} I_{FC}$$

Now, the Nernst's instantaneous voltage can be expressed as

$$E = N_0\left[E_0 + \frac{RT}{2F}\log\left[\frac{pH_2\sqrt{pO_2}}{pH_2O}\right]\right]$$

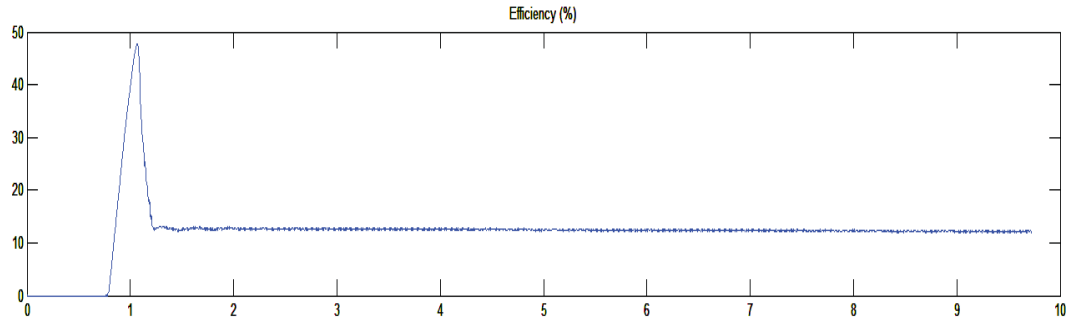

Figure 5: Efficiency of fuel cell plant

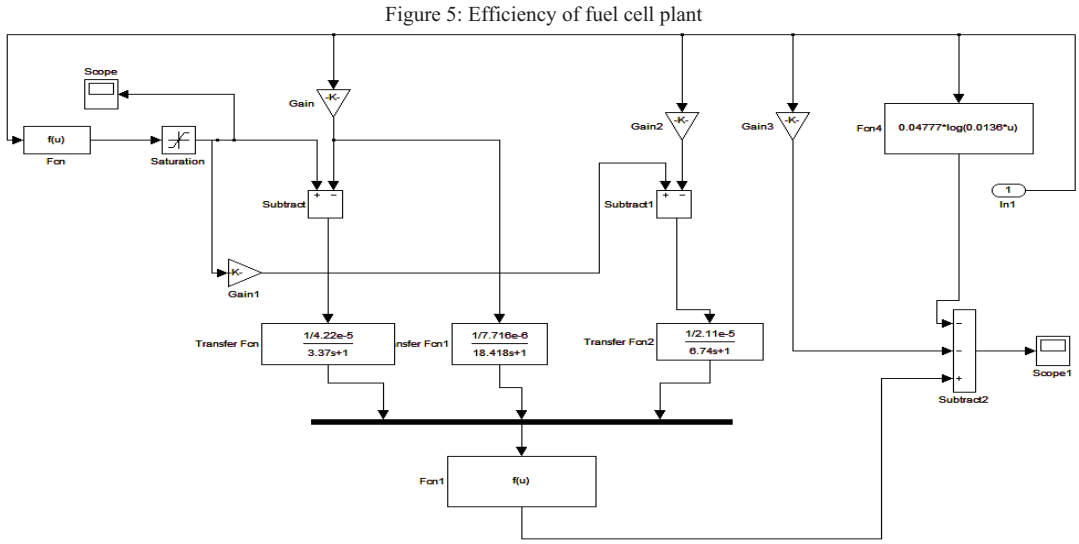

Figure 6: Dynamic model of fuel cell

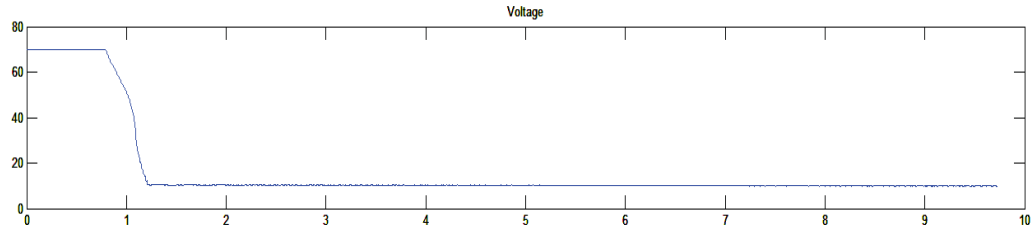

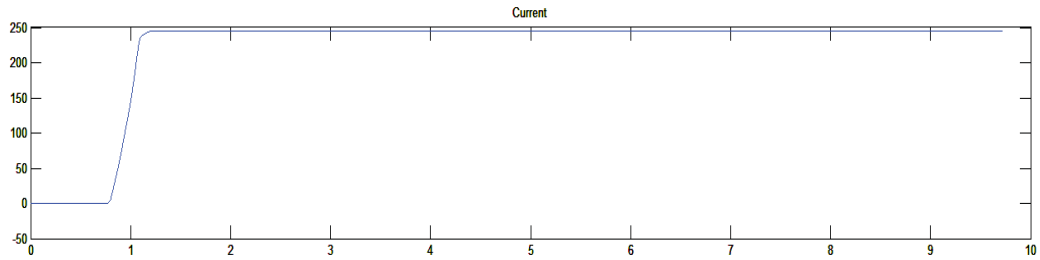

Figure 7: Voltage and Current waveforms of fuel cell plant

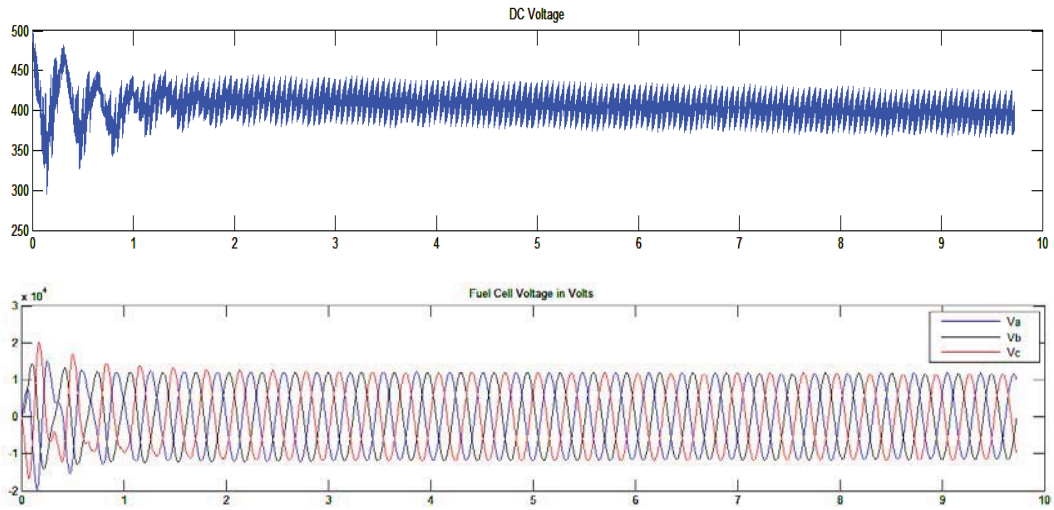

Figure 8: DC and AC voltage waveforms of fuel cell plant

IV. SIMULATION AND RESULTS

In this chapter simulated results for various types of interconnections are presented during line to ground fault condition on grid. Stability is being determined under the following conditions:

(i) when wind plant is connected and not connected with grid

(ii) when fuel cell plant is connected and not connected with grid

4.1 Wind Plant Connected With Grid During Diferent- Diferent Faultcondition

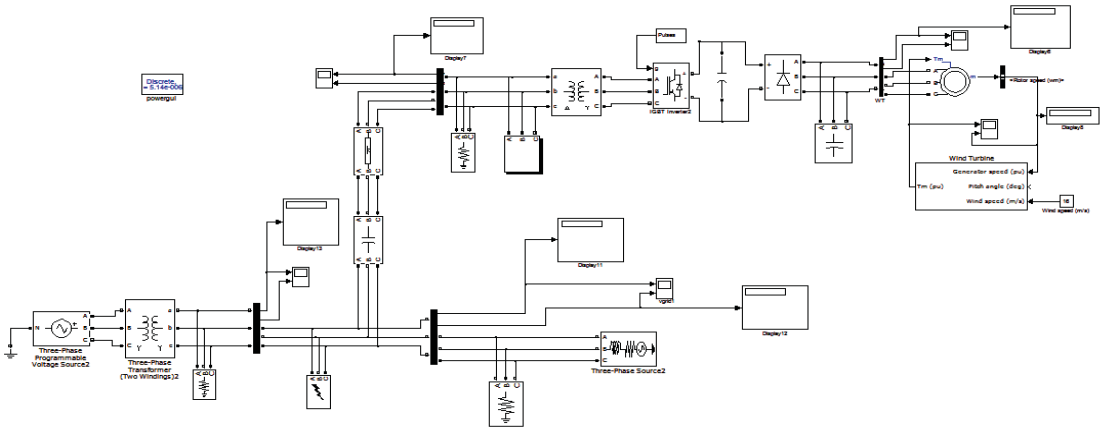

Figure 9: Simulink model of wind plant and grid during fault

a) LG Fault :

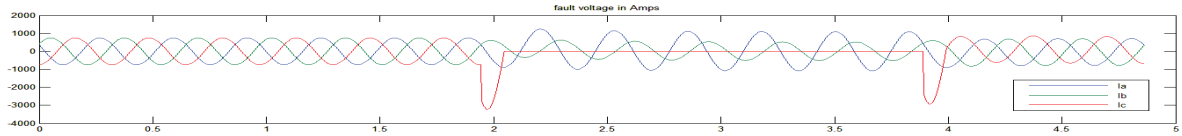

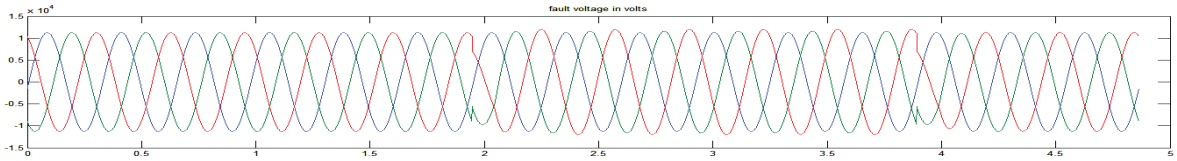

Figure 10: voltage and current waveform on grid when wind plant is not connected

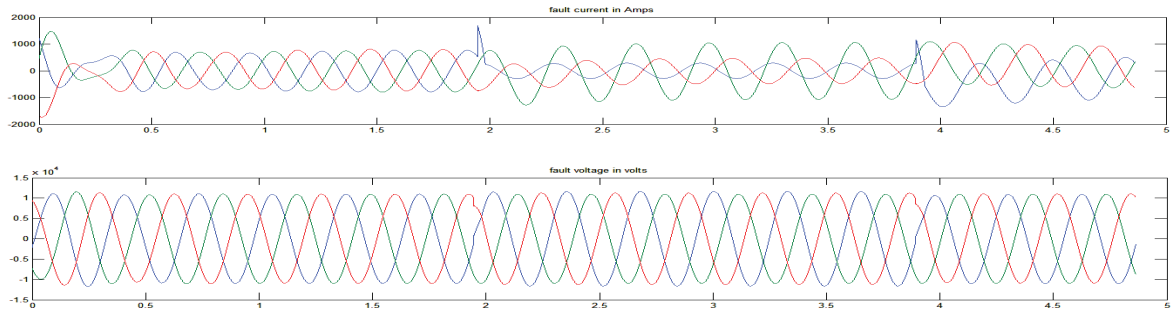

Figure 11: voltage and current waveform on grid when wind plant is connected

b) LL Fault :

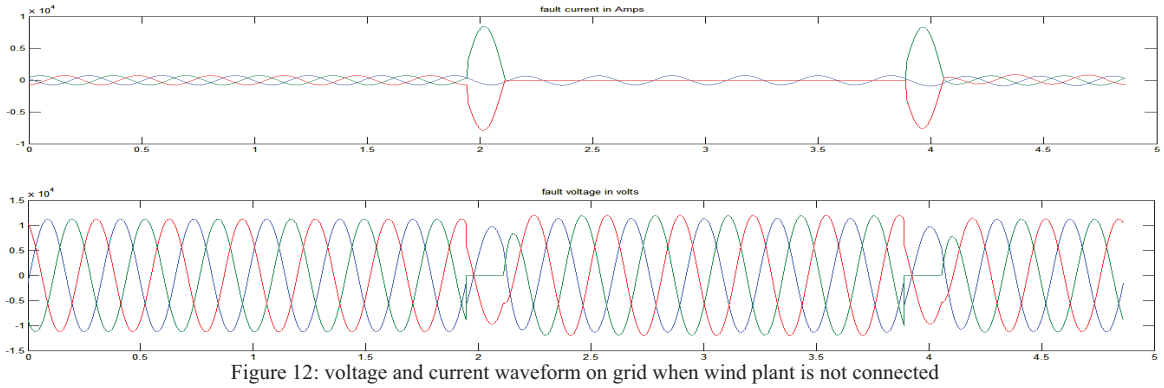

Figure 12: voltage and current waveform on grid when wind plant is not connected

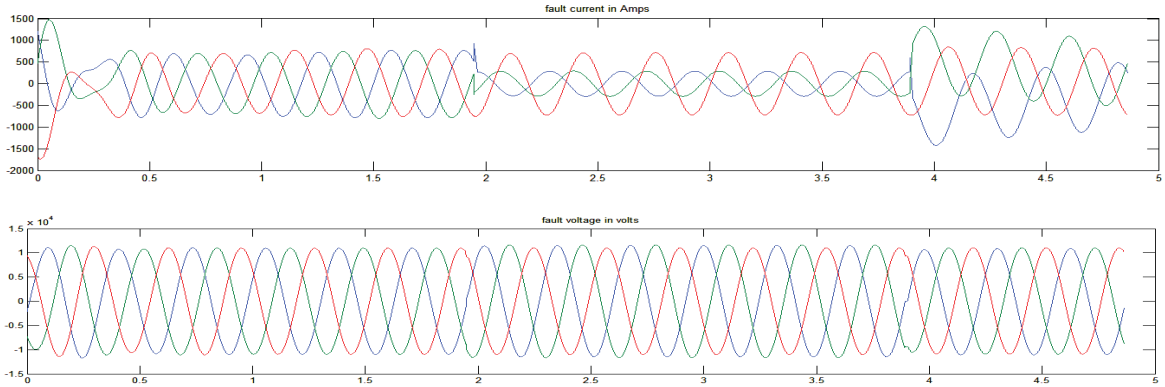

Figure 13: voltage and current waveform on grid when wind plant is connected

c) LLG Fault :

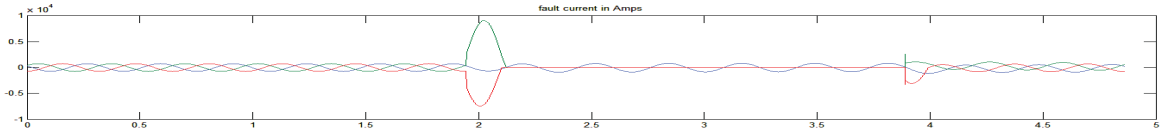

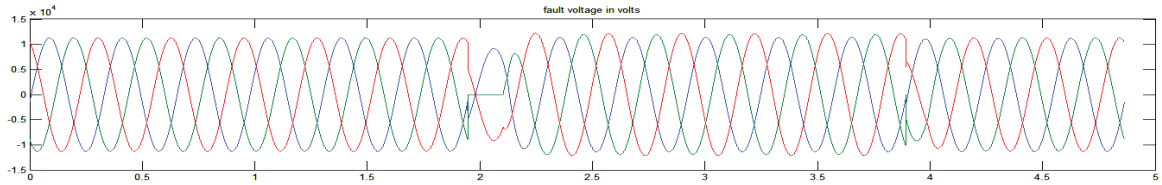

Figure 14: voltage and current waveform on grid when wind plant is not connected

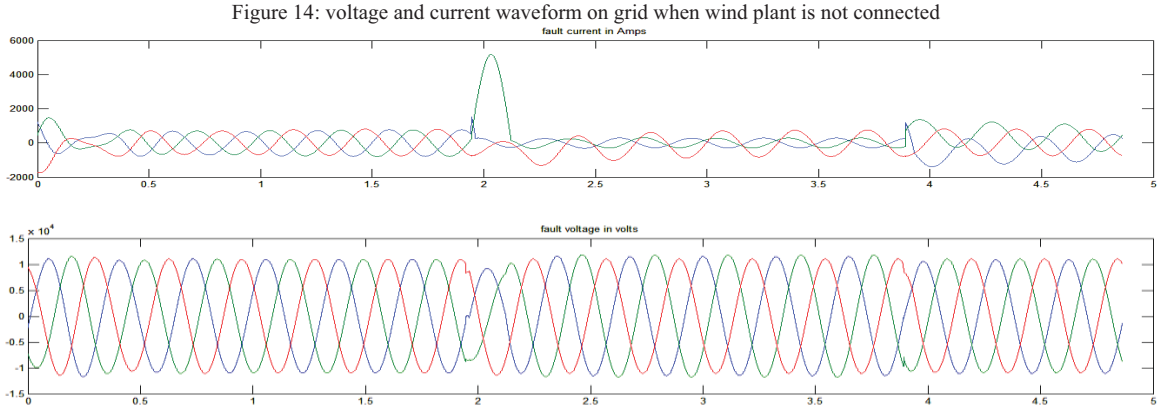

Figure 15: voltage and current waveform on grid when wind plant is connected

Table 1: values of voltage and current before and after connecting wind plant under normal And faulty condition

	Without wind plant	With wind plant
V(nom.)	11.2Kv	11.7Kv
I(nom.)	850A	750A
V(fault)	6.4Kv	6.9Kv
I(fault)	7340 Amp.	7320 Amp.

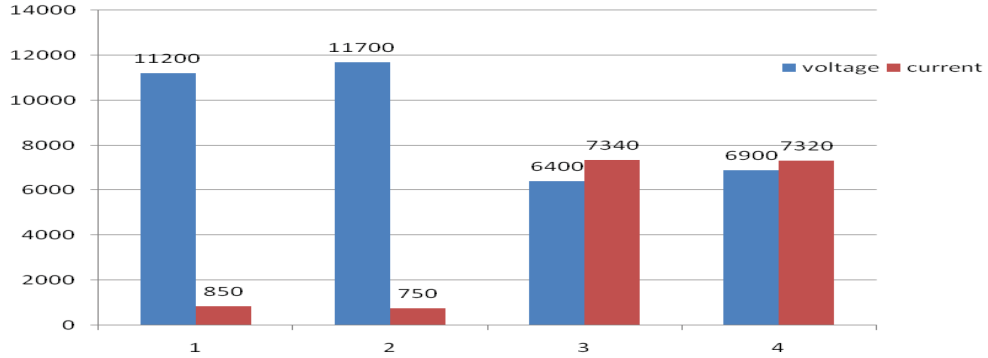

Figure 16: graphical representation of different values

DISCUSSION-1

Fig.10 and 11 shows voltage and current waveforms when wind plant are not connected and connected with grid during L-G fault respectively. Single line to ground fault takes place on grid for 0.5sec. During fault we have analyzed the parameters such as voltage, current and checked the system stability. It is clear from the above fig.4.3 that voltage profile is considerably improved after wind plant interconnected with grid, whereas value of current is reduced as compared to fig. 11. The combined waveform of voltage and current for both conditions are shown in fig.4.4. The various data's of voltage and current are shown in table 1. These values are being represented by plotting a graph. After connecting the wind plant system to the existing system we can say that power system stability is being improved by 1.078%.

4.2 Fuel Cell Plant Connected With Grid During L-G Fault

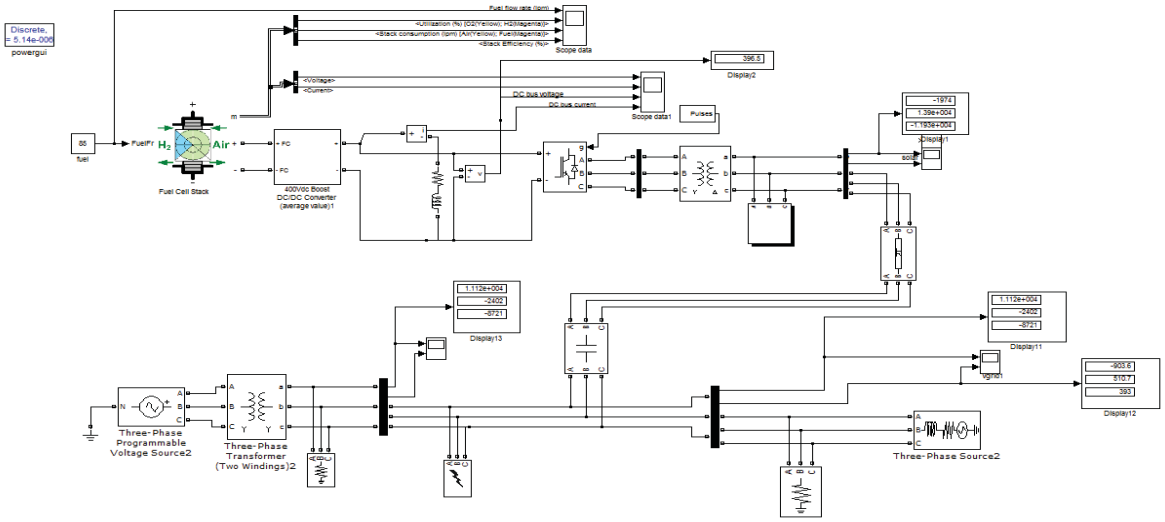

Figure 17: Simulink model of fuel cell plant and grid during fault

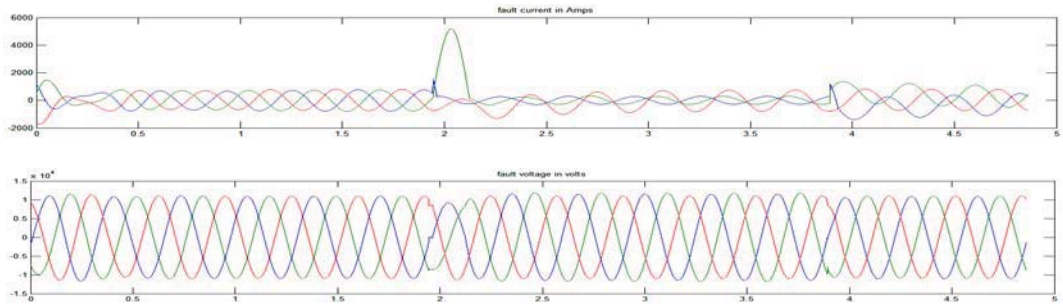

Figure 18: voltage and current waveform on grid when fuel cell plant is not connected

4.2.1.1 LG Fault:

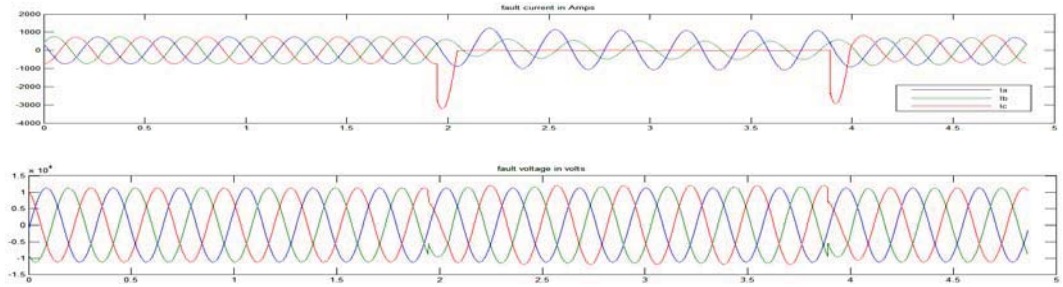

4.2.1.2 LL Fault:

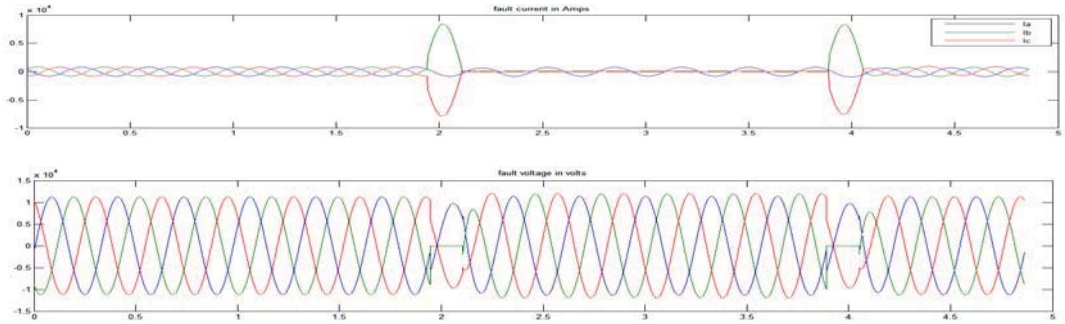

4.2.1.3 LLG Fault:

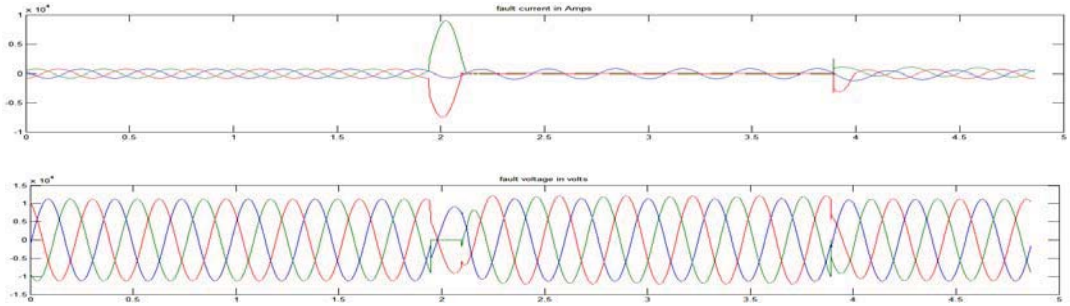

Figure 19: voltage and current waveform on grid when fuel cell plant is connected

Table 2: values of voltage and current before and after connecting fuel cell plant under normal and faulty condition

	Without fuel cell plant	With fuel cell plant
V(nom.)	11.2Kv	11.650Kv
I(nom.)	850A	758.46A
V(fault)	6.4Kv	6.665Kv
I(fault)	7340 Amp.	7332.45 Amp.

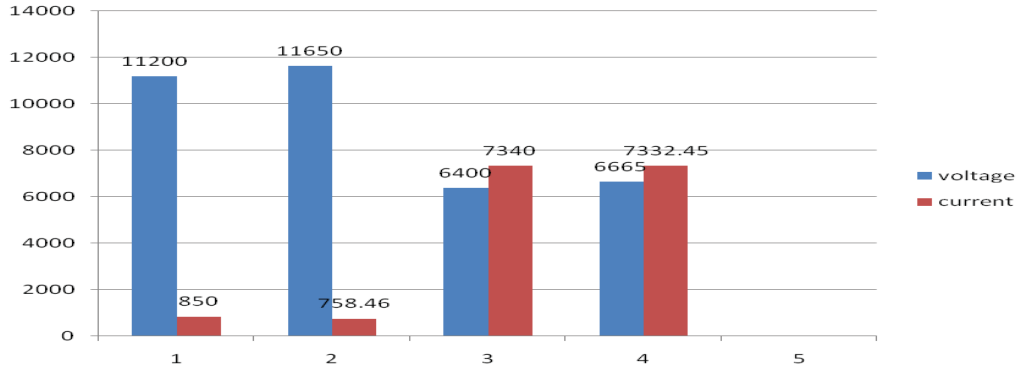

Figure 20: graphical representation of different values

DISCUSSION-2

Fig 18 shows voltage and current waveforms when fuel cell plant are not connected and connected with grid during L-G fault respectively. Single line to ground fault takes place on grid for 0.5sec. During fault we have analyzed the parameters such as voltage, current and checked system stability. It is clear from the above fig.19 that voltage profile is considerably improved after fuel cell plant interconnected with grid, whereas value of current is reduced as compared to 19. The combined waveform of voltage and current for both conditions are shown in fig.19. The various data's of voltage and current are shown in table 2. These values are being represented by plotting a graph. After connecting the fuel cell plant system to the existing system we can say that power system stability is being improved by 1.041%.

V. CONCLUSION

This paper shows the impact of hybrid power system on the stability of large power system. The dynamic modelling and simulation results of a renewable energy based hybrid power system which consists of wind turbine (WT) and fuel cell (FC) systems for power generation has been presented. The various energy sources such as wind/ FC are modelled individually and latterly integrate in Matlab/Simulink software. The developed Simulink model of hybrid system is then connected to 11KV grid through an AC bus. Simulation studies have been carried out to verify the system performance under fault condition. Simulation results shows that after combining wind, solar and fuel cell power the system stability has been considerably improved as compared to using independent wind / fuel cell power.

REFERENCES

[1] Teng-Fa Tsao, Po-Hung Chen and Hung-Cheng Chen, *"Dynamic Modelling and Simulation of Hybrid Power Systems Based on Renewable Energy"*, IEEE International Conference on Energy and Environment Technology, November, 2009.

[2] W. Du, H. F. Wang, X. F. Zhang and R. Dunn, *"Effect of Grid-connected FC Generation on Power System Oscillation Damping",* IEEE Trans. on Energy Conversion, Vol.19, No.2, pp429-434, 2009.
[3] Adam C. Broders, *"Combining Of Renewable Energy Plants to Improve Energy Production Stability", Phd thesis.*
[4] J. G. Slootweg *"Wind Power Modelling and Impact on Power System Dynamics",* Phd thesis.
[5] N. Mohan, T. M. Undeland and W. P. Robbins*, "Power Electronics Converters, Application and Design",* John Wiley 1995.
[6] Bei Gou, Woon Ki Na, Bill Diong, *"Fuel Cell Modelling, Control and applications",* CRC Press.
[7] Zehra Ural, Muhsin Tunay Gencoglu, *"Design and Simulation of A PEM Fuel Cell System",* 10th International Conference on Clean Energy (ICCE-2010) Cyprus, September 15-17, 2010.
[8] O.C. Onar, M. Uzunoglu, M.S. Alam, *"Dynamic modeling, design and simulation of a wind/fuel cell/ultra-capacitor-based hybrid power generation system",* Journal of Power Sources 161 (2006).
[9] Umashankar S, Dr. Kothari D P and Mangayarkarasi P, *"Wind Turbine Modelling of a Fully-Fed Induction Machine",* INTECH, Croatia, pp. 558, June 2010.
[10] Durga Gautam and Vijay Vittal*, "Impact of DFIG based Wind Turbine Generators on Transient and Small Signal Stability of Power Systems",* IEEE Transactions on Power Systems, June 2009.
[11] P. Kundur, *"Power System Stability and Control'',* McGraw-Hill, Inc.