Design of embedded automatic face recognition system based on arm9

Krishnareddy sangati
M.Tech.(Embedded Systems), P.G. Student
Department of Electronics and Communication Engineering
Cvsr engineering clg, jodimettla, Hyderabad, A.P., India

D.Narendar singh
Associate Professor
Department of Electronics and Communication Engineering
Cvsr engineering college , jodimettla, Hyderabad, A.P., India

Abstract- Face recognition system makes use of latest, less power consumptive, small size and fast working micro controller like S3C2440.It uses an USB camera to take a snapshot of the users that are present in front of camera. The captured images are stored into NAND flash. Advanced security to identify particular person (criminals) based on the images stored already inside the data connected to the USB port of ARM9. The embedded system is designed based on face recognition algorithm to detect the particular person (criminals). If any person identification is matched with the images present in data automatically sends message to the police station through GSM Modem & automatically Video display show in LCD.

Keywords – S3C2440, USB camera, NAND flash, GPRSModem.

I. INTRODUCTION

Now a days security plays a vital role in the daily lives of people starting from the common people to officials like VIPs, VVIPs. The existing security systems are having biometric systems as their core part. They are using biometric systems like FPRS (Finger Print Recognition System) and EIRS (Eye Iris Recognition System). There is a possibility to fraud these types of biometric based security systems. The traditional algorithms identify faces by extracting landmarks, or features from an image of the subject's face. For example the algorithm may analyze the relative position, size, and shape of the eyes, nose, cheekbones, and jaw. These features are then used to search for other images with matching features. Some algorithms normalize a gallery of face images and then compress the face data, only saving the data in the image that is useful for face detection. Recognition algorithms are divided into two types. First type is geometric which looks at distinguishing features and second type is photometric which distill an image into values and comparing the values with the templates to eliminate variances. Most popular recognition algorithms include PCA (Principal Component Analysis) using Eigen faces, LDA (Linear Discriminate Analysis), Elastic Bunch Graph Matching using the Fisher Face algorithm, the Hidden Markov Model, and neuronal motivated dynamic link matching.

The latest technology that is emerged into facial recognition system is three- dimensional face recognition. This technique makes use of 3D sensors to capture information about the shape of a face. This information is later used to identify the distinctive features of the surface of a face such as contour of the eyes sockets, nose, and chin. One of the advantage of 3D face recognition is: this is not affected by changes in lighting like other techniques. It can also identify a face from a range of viewing angles, including a profile view.

The FRS (Facial Recognition System) is having their major application as security systems. Other application is to prevent the voter fraud in elections. Some people will try to vote under several names in an attempt to place multiple votes. By comparing new facial image with those already there in the data base authorities can easily reduce the duplicate registrations. Similar techniques can be used to prevent the people from obtaining fake identification cards and driving licenses.

II. IMPLEMENTATION OF SYSTEM

The system is based on the ARM9 processor, using principal component analysis (PCA) of face recognition systems. Achieved recognition from the PC machine. System uses the common USB camera for image acquisition,

Linux-based operating system software, and ARM9 S3C2440. Based on this hardwareplatform, Embedded Linux operating system and drivers are developed firstly, and then face recognition system is achieved on the operating system.

We develop a low-cost, small face recognition face recognition system which has important practical significance. The system uses ARM9 as the system control chip, the system achieved low cost, portability, miniaturization requirements. Different from the run on PC machine face recognition algorithm, the system identification algorithm must take into account the computing capacity and ARM-speed, so that recognition accuracy and recognition time is an acceptable range.

2.1 Transplantation of Embedded Linux Kernel

The Linux kernel version that the system choose is special for the embedded systems: Linux Kernel v2.4.18, in the kernel source code directory by typing "make menuconfig" command can configure the kernel. After entering the main interface the kernel can be configured in many aspects. Generally the commands, which are used to compile the kernel, are as follow:

```
root# make dep
root# make zImage
```

Kernel C source code files have a certain dependency relationship with header files; Makefile has to know this relationship in order to determine which parts of source codes are needed to be compiled. But using "make menuconfig" command to configure the kernel, the command will automatically generate the required header files for compiling kernel. Therefore, after we change the configuration of the kernel and input the command, the correct dependency relationship should be reestablished. But this step in the kernel2.6 version is no longer required.[3]

2.2. Implementation of Drivers Development

Linux device driver can be divided into the following parts: Registration and cancellation of the driver; Opening and releasing the device; Reading and writing the device; Controlling the device; the interrupts of device and the cyclic process.

Embedded Linux kernel which already contains many source codes of general purpose hardware device driver for different hardware platforms, they are only needed to be done some simple modifications and then can be used. For some of the more special equipments (such as the camera drive), you need a detailed understanding of the hardware and then finish the driver development.[4] Video4Linux provides a unified programming interface for the USB camera.

In this paper, the USB camera device file ---- (/ dev/video0) is primary to capture and store images for the corresponding programs. Data structures are commonly used in the program as follow:

struct voide_capability grab_cap; video_capability contains the camera's basic information, such as device name, the max and min resolution, and signal source information and so on.

Corresponding to member variables: name[32]maxwidth maxheightminwidthminheightchannels(the number of signal source)type and so on.

struct video_picture grab_pic; voide_picture contains a variety of properties of the captured images ,such as:

brightness,hue,contrast,whiteness,depth and so on. struct video_mmap grab_buf; video_mmap is used to map memory.

struct video_mbuf grab_vm; video_mbuf uses mmap to map frames information , which actually is the frames information from the camera buffer memory. Contains: size, frames, offsets and so on.

2.3. Embedded HumanFace Recognition System

Traditional face recognition system includes five parts: (1) inputting image from camera, (2) face detection, (3) preprocessing, (4) feature extraction, (5) feature matching. The Figure 1 is the work flow chart of embedded face recognition system in my project.

Fig. 1 Work flow chart of embedded face recognition system.and block diagram

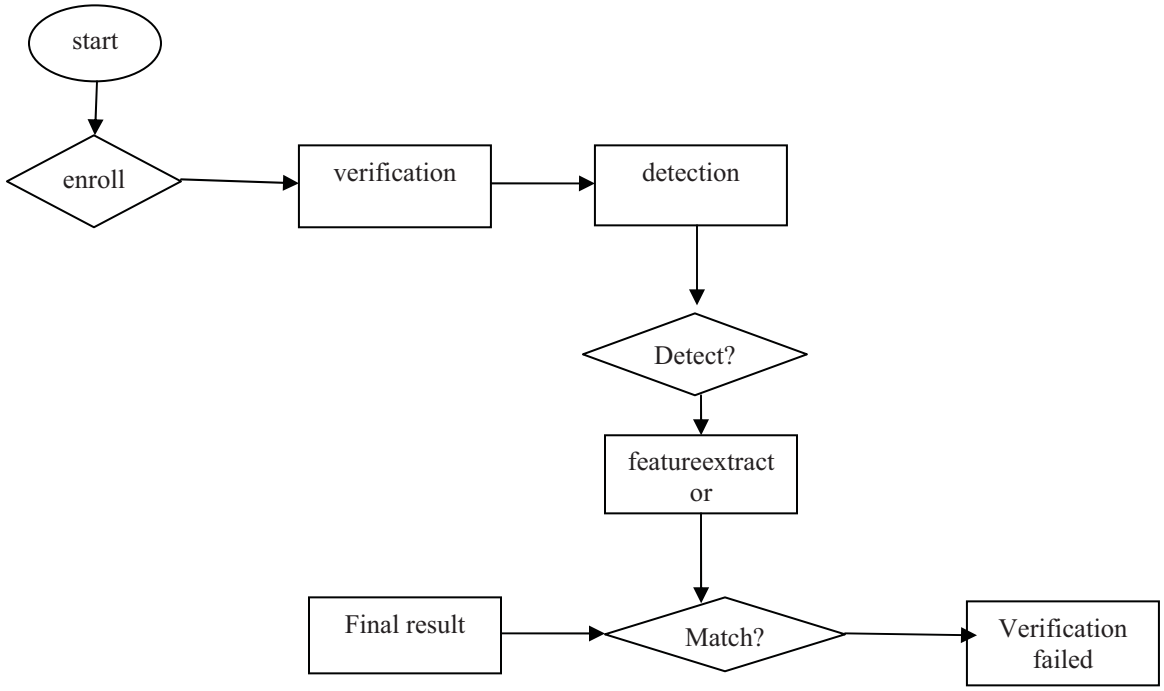

In the above Figure the first step is to detect human face. Face detection is one of the main technical parts of the automatic face recognition system. Face detection needs to determine whether the given image is a face, if it is someone's mface, and then return the position of the face. In order to better recognize all of the faces in the image, the system use face class Haar feature to detect human face [5]. After having gotten all of the faces, the next step is finding the special face.

BLOCK DIAGRAM

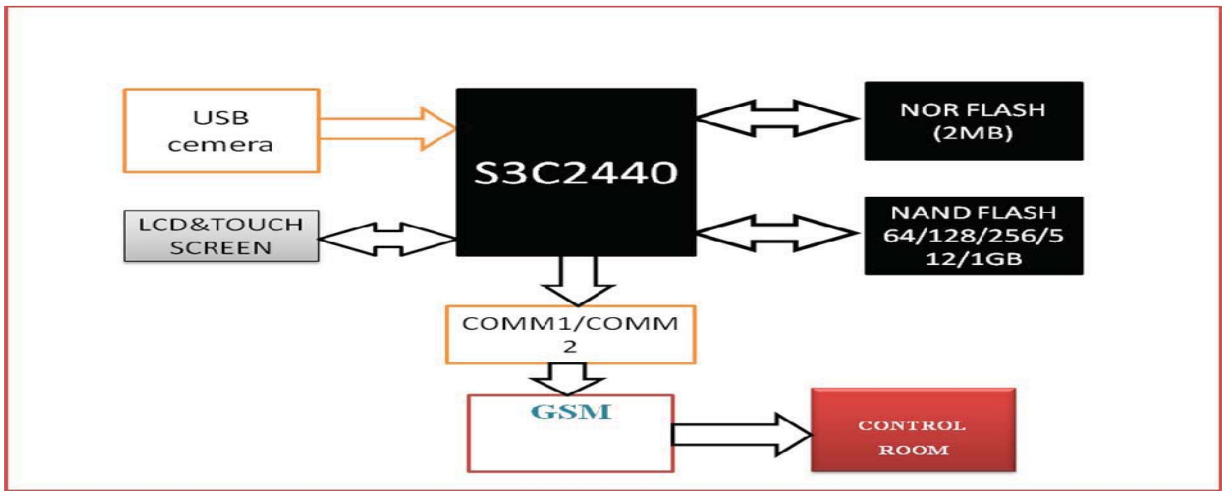

Compared with traditional face recognition system, in this paper the embedded face recognition system is based on the Gabor feature extraction algorithms of the face region and principal component analysis (PCA) with nearest neighbor classifier as the core algorithms of the system identification. Face samples are preprocessed for extracting the Gabor feature vector, by using PCA to reduce the feature vector's dimension and we can get face PCA subspace of the sample Gabor feature, we call it face space. And then the input faces are projected into the subspace of face PCA and get image face. The distance from face space to image face as a measure of face similarity.

III. RECOGNITION ALGORITHMS:

Face recognition involves two stages:

Face Detection:

Face detection is the stage where a photo is searched to find any face (shown here as a green rectangle), then image processing cleans up the facial image for easier recognition.

Face Recognition:

Face recognition is the stage where that detected and processed face is compared to a database of known faces, to decide who that person is (shown here as red text

3.1 A.Haar Features:

Haar-like features[6] are digital image features used in object recognition. A Haar-like feature considers adjacent rectangular regions at a specific location in a detection window, sums up the pixel intensities in each region and calculates the difference between these sums.This difference is then used to categorize subsections of an image. For example, let us say we have an image database with human faces. It is a common observation that among all faces the region of the eyes is darker than the region of the cheeks. Therefore a common haar feature for face detection is a set of two adjacent rectangles that lie above the eye and the cheek region. The position of these rectangles is defined relative to a detection window that acts like a bounding box to the target object (the face in this *case.* This difference is then compared to a learned threshold that separates non-objects from objects. Because such a Haar-like feature is only a weak learner or classifier (its detection quality is slightly better than random guessing) a large number of Haar-like features are necessary to describe an object with sufficient accuracy. In the Viola–Jones object detection framework, the Haar-like features are therefore organized in something called a classifier cascade to form a strong learner or classifier.The key advantage of a Haar-like feature over most other features is its calculation speed. Due to the use of integral images, a Haar-like feature of any size can be calculated in constant time (approximately 60 microprocessor instructions for a 2-rectangle feature).

3.2 .Gabor Filters:

Human face images are represented by the gray values[7] which are affected by face expressions, lighting conditions and various geometric transformations, while the Gabor filter can capture the images which correspond to the local structure information of the spatial location, spatial frequency and direction. Two dimensional Gabor filter[8] is a kind of band-pass filter; in spatial domain and frequency domain Gabor filter has a better distinguish ability, such as direction selectivity in spatial domain and frequency selectivity in frequency domain. The parameters of two dimensional Gabor filters reflect the ways of sampling in spatial domain and frequency domain, and determine the ability of expressing signal.

3.3 PCA algorithm:

PCA method (ie, eigenface method) is M. Turk and A. Pentland proposed in the literature, the basic idea is: the image vector by KL transformation from high-dimensional vector is converted to low-dimensional vector, and the formation of low-dimensional linear vector space, that is, subspace, and then face the projector to the low-dimensional space, with the resulting projection coefficients as the recognition feature vectors. Recognize faces, just the projection coefficient of samples to be identified in the target database sample set of projection coefficients were compared to determine what types of recently. PCA algorithm is divided into two steps: the core face database generation phase, the training phase and identification phase.

IV. SYSTEM EXPERIMENTAL TEST RESULT:

4.1.Face Detection:

The face class Haar feature which is introduced in the above paragraph is used to detect human faces. The original images are shown in Figure , which are my own images.

The core codes are as follows
cascade = (CvHaarClassifierCascade*)cvLoad(cascade_name, 0, 0, 0); // loads a trained cascade of haar classifiers from a file cvEqualizeHist(small_img, small_img); // equalizes histogram of the input image CvSeq* faces = cvHaarDetectObjects(small_img, cascade, storage, 1.1, 2, 0, cvSize(30, 30));//detect the faces of the input image void detect_and_draw(IplImage* img); //to circle marked human faces on the image. The final images of face detection by using face class Haar feature are shown in Figure

4.2. Response Features of Gabor Transform
Gabor transform is suitable for analyzing multi-channel and multi-resolution images in order to obtain spatial frequency, spatial location and the local features information of direction selectivity, such as organs of human face. The next figures show the response features of the image edge (Figure 9) and the spatial location (Figure 10) by the Gabor transform, which is introduced in the above paragraph.

The core codes are as follows
CvGabor *gabor1 = new CvGabor; //to create Gabor
kernel=gabor1->get_image(CV_GABOR_REAL);
// get the real part of Gabor filter
gabor1->conv_img(img,reimg,
CV_GABOR_REAL);
// get the real part of Gabor filter response of image
gabor1->conv_img(img, reimg,
CV_GABOR_IMAG);
//get the imaginary part of Gabor filter response of image
gabor1->conv_img(img, reimg,
CV_GABOR_MAG);
//get the modulus of Gabor filter response of image

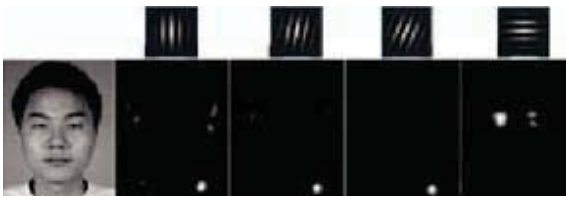

Fig. 9The features of the image edge.

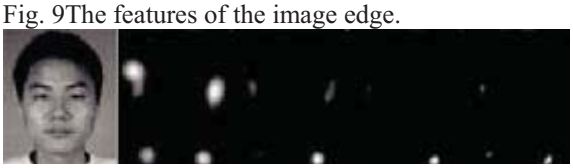

Fig. 10 The features of the spatial location.

4.3 Traing Data of PCA

Now by projecting the sample images into the subspace, which is discussed in the above paragraph, and then getting the training data of PCA in Figure.The core codes are as follow void doPCA(); //do PCA on the training faces void storeTrainingData(); // store training data int loadTrainingData(CvMat ** pTrainPersonNumMat); // load training data double * findNearestNeighbor(float * projectedTestFace); //the distance as a measure of face similarity. Then real-time getting human face image, using Euclidean Distance measures the human face image, and testing the similarity of the training faces and the image. If the measured difference is in the range of threshold value, it indicates real-time image meets the requirements and the image exists in the face space, and then finding the most similar face in the face space and outputting the corresponding personal information, or the image can't be recognized and system logs out.

V. CONCLUSION

In this paper, the development process of embedded face recognition system is introduced in detail, including transplantation of Linux operating system, the development of drivers, and the research of the corresponding algorithms of face recognition. By testing the system, it basically achieves the desired result.

REFERENCES

[1] He Dong-feng, Ling Jie. Face Recognition : A Survey[J] of Mirocomputer Development, 2003,13(12):0075-0078.

[2] Chellappa R,Wilson C L,Sirohey S.Human and machine recognition of faces:A survey[J]. Digital Object Identifier,1995,83(5):705-741.

[3] Yang Jian-wei, Yang Jian-xiang. Linux Transplant Based on the Processor of S3C2410 [J]. Information Technology, 2007,(8):0097-0100.

[4] Liu Chun-cheng. USB Webcam Driver Development Based on Embedded Linux [J]. Compter Engineering and Design, 2007, 28(8):1885-1888.

[5] Chen Jian-zhou, Li Li, Hong Gang, Su Da-wei. An Approach of Face Detection In Color Images Based on Haar Wavelet [J]. Microcomputer Information, 2005, 21(10-1):157-159.

[6] P. Viola, M. Jones. Rapid object detection using a Boosted cascade of simple features. In: IEEE Conference on Computer Vision and Pattern Recognition, pp. 511-518, 2001.

[7] Zhu Jian-xiang, Su Guang-da, Li Ying-chun. Facial Expression Recognition Based on Gabor Feature and Adaboost [J]. Journal of Optoelectronics y Laser, 2006, 17(8):0993-0998.

[8] Cao Lin, Wang Dong-feng, Liu Xiao-jun, Zou Mou-yan. Face Recognition Based on Two-Dimensional Gabor Wavelets [J]. Journal of Electronics & Information Technology, 2006, 28(3): 0490-0494.

[9] Renaud S´eguier, A vary fast adaptive face detection system, Institute of Electronics and Telecommunications of Rennes Sup´elec, Avenue de la Boulaie, 35511 Cesson-S´evign´e, France, Proceeding.http://www.actapress.com/Content_Of_Proceeding.aspx?ProceedingID=283Visualization, Imaging, and Image Processing 452-456, April 2004