Induction Motor Drive Using Seven Level Multilevel Inverter For Energy Saving In Variable Torque Load Application

P.Rajendar
Department of Electrical and Electronics Engineering
Joginpally B.R. Engineering College, Hyderabad, Andhra Pradesh, India

G. Naveen
Department of Electrical and Electronics Engineering
Joginpally B.R. Engineering College, Hyderabad, Andhra Pradesh, India

A. Pavan Kumar
Department of Electrical and Electronics Engineering
Joginpally B.R. Engineering College, Hyderabad, Andhra Pradesh, India

Abstract- The main objective of this paper is to control the speed of an induction motor by using seven level diode clamped multilevel inverter. To obtain high quality sinusoidal output voltage with reduced harmonics. The proposed Scheme for diode clamped multilevel inverter is multicarrier SPWM control. An open loop speed control can be achieved by using V/ƒ method. This method can be implemented by changing the supply voltage and frequency applied to the three phase induction motor at constant ratio. The proposed system is an effective replacement for the conventional method which has high switching losses, as a result a poor drive performance. The simulation result portrays the effective control in the motor speed and an enhanced drive performance through reduction in total harmonic distortion. The effectiveness of the system is verified through simulation using MATLAB Simulink package.

Keywords – Diode clamped multilevel inverter; induction motor; Multicarrier PWM technique; THD; V/ƒ method.

I. INTRODUCTION

In this paper, a three-phase diode clamped multilevel inverter fed induction motor is described. The diode clamped inverter provides multiple voltage levels from a five level unidirectional voltage balancing method of diode clamped inverter. The voltage across the switches has only half of the dc bus voltage. These features effectively double the power rating of voltage source inverter for a given semiconductor device. The proposed inverter can reduce the harmonic contents by using multicarrier SPWM technique. It generates motor currents of high quality. V/ƒ is an efficient method for speed control in open loop. In this scheme, the speed of induction machine is controlled by the adjustable magnitude of stator voltages and its frequency in such a way that the air gap flux is always maintained at the desired value at the steady state. Here the speed of an induction motor is precisely controlled by using seven level diode clamped multilevel inverter.

1.1Drive System Discription –

In the conventional technique normal PWM method is used. So that the voltage and current is of poor qualities and the switching frequency causes more amount of switching losses. Those drawbacks are rectified using three phase diode clamped multilevel inverter. The voltage and current quality are better and the switching losses are reduced when compared to the conventional technique. Also the THD is found to be better.

1.2 Structure of Seven Level Diode Clamped Multilevel Inverter –

The seven-level neutral point-clamped voltage source inverter is shown in Fig 1. It contains 36 unidirectional active switches and 30 neutral point clamping diodes. The middle point of the 6 capacitors “n” can be defined as the neutral point. The major benefit of this configuration is each switch must block only one-half of the dc link voltage (Vdc/6). In order to produce seven levels, only two of the twelve switches in each phase leg should be turned on at

any time. The dc-bus voltage is split into three levels by two series-connected bulk capacitors, Ca and Cb, via. They are same in rating.

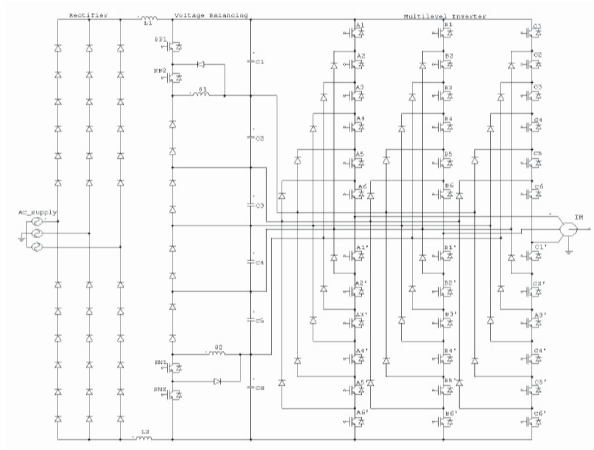

Figure1. Seven level inverter based drive circuit

The diodes are all same type to provide equal voltage sharing and to clamp the same voltage level across the switch, when the switch is in off condition. Hence this structure provides less voltage stress across the switch.

1.3. Principle of Operation –

Table 1.Shows the voltage levels and their corresponding switch states. State condition 1 means the switch is on, 0 means the switch is off. There are two complementary switch pairs in each phase. These pairs for one leg of the inverter are (A1, A1'), (A2, A2'), (A3, A3'), (A4, A4'), (A5,A5'), (A6,A6'). If one of the complementary switch pairs is turned on, the other of the same pair must be off.

To produce a staircase-output voltage, consider one leg of the three-level inverter. The steps to synthesize the seven-level voltages are as follows.

- For an output voltage level Vao=Vdc, turn on all upper-half switches A1, A2.A3, A4, A5 and A6
- For an output voltage level Vao= 5Vdc/6, turn on upper switch A2.A3,A4,A5,A6 and one lower switch A1'.
- For an output voltage level Vao= 4Vdc/6, turn on all lower half switches A3, A4, A5, A6 and A1', A2'.
- For an output voltage level Vao= Vdc/2, turn on all lower half switches, A4, A5, A6, and A1', A2'.A3'.
- For an output voltage level Vao= Vdc/3, turn on all lower half switches, A5, A6, and A1', A2'.A3', A4'.
- For an output voltage level Vao= Vdc/6, turn on all lower half switches, A6 and A1', A2'.A3', A4', A5'.
- For an output voltage level Vao= 0, turn on all lower half switches, A1',A2'.A3',A4',A5' and A6'.

Voltage V_{a0}	Switch State											
	A 1	*A 2*	*A 3*	*A 4*	*A 5*	*A 6*	*A 1'*	*A 2'*	*A 3'*	*A 4'*	*A 5'*	*A 6'*
V7	1	1	1	1	1	1	0	0	0	0	0	0
V6	0	1	1	1	1	1	1	0	0	0	0	0
V5	0	0	1	1	1	1	1	1	0	0	0	0
V4	0	0	0	1	1	1	1	1	1	0	0	0
V3	0	0	0	0	1	1	1	1	1	1	0	0
V2	0	0	0	0	0	1	1	1	1	1	1	0
V1	0	0	0	0	0	0	1	1	1	1	1	1

Table 1.Output voltage levels and their Switching states

II. PROPOSED SCHEME

The block schematic of multilevel inverter fed three phase induction motor is show in Fig4.3. The complete system will consist of two sections; a power circuit and a control circuit. The power section consists of a power rectifier, filter capacitor, and three phase diode clamped multilevel inverter. The motor is connected to the multilevel inverter. An ac input voltage is fed to a three phase diode bridge rectifier, in order to produce dc output voltage across a capacitor filter. A capacitor filter, removes the ripple contents present in the dc output voltage.

The pure dc voltage is applied to the three phase multilevel inverter through capacitor filter. The multilevel inverter has 36 MOSFET switches that are controlled in order to generate an ac output voltage from the dc input voltage The control circuit of the proposed system consists of three blocks namely microcontroller, opto-coupler and gate driver circuit. The microcontroller is used for generating gating signals required to drive the power MOSFET switches present in the multilevel inverter. The voltage magnitude of the gate pulses generated by the microcontroller is normally 5V. To drive the power switches satisfactorily the opto coupler and driver circuit are necessary in between the controller and multilevel inverter. The output ac voltage is obtained from the multilevel inverter can be controlled in both magnitude and frequency (V/f open loop control). The controlled ac output voltage is fed to the induction motor drive. When the power switches are ON current flows from the dc bus to the motor winding.

The motor windings are highly inductive in nature; they hold electric energy in the form of current. This current needs to be dissipated while switches are off. Diodes are connected across the switches give a path for the current to dissipate when the switches are off. These diodes are also called freewheeling diodes.

The V/f control method permits the user to control the speed of an induction motor at different rates. For continuously variable speed operation, the output frequency of multilevel inverter must be varied. The applied voltage to the motor must also be varied in linear proportion to the supply frequency to maintain constant motor flux.

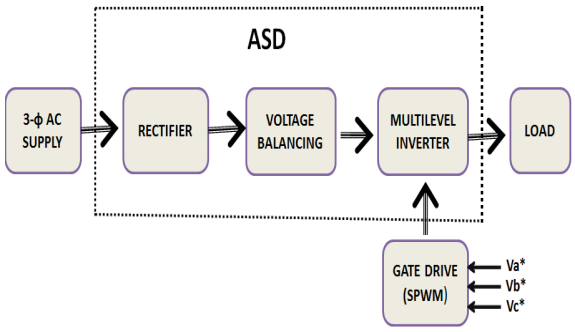

Figure2. Basic block diagram

III. MODULATION STRATEGY

This Paper mainly focuses on multicarrier SPWM method. This method is simple and more flexible than SVM methods. The multicarrier SPWM method uses several triangular carrier signals, keeping only one modulating sinusoidal signal. If an n-level inverter is employed, n-1 carriers will be needed. The carriers have the same frequency WC and the same peak to peak amplitude Ac and are disposed so that the bands they occupy are contiguous. The zero reference is placed in the middle of the carrier set. The modulating signal is a sinusoid of frequency Wm and amplitude Am. At every instant each carrier is compared with the modulating signal. Each comparison gives 1(-1) if the modulating signal is greater than (lower than) the triangular carrier in the first (second) half of the fundamental period, 0 otherwise. The results are added to give the voltage level, which is required at the output terminal of the inverter. Multicarrier PWM method can be categorized into two groups: 1) Carrier Disposition method 2) Phase shifted PWM method.

Advantages of multicarrier PWM techniques

- Easily extensible to high number of levels.
- To distribute the switching signals correctly in order to minimize the switching losses.
- APOD, where each carrier band is shifted by 180° from the adjacent bands
- POD, where the carriers above the zero reference are in phase, but shifted by 180° from those carriers below the zero reference.
- PD, where all the carriers are in phase. The Fig 4.4 shows the In-Phase Disposition Technique.
- In this paper the gating pulses for IGBT switches are generated by using In-phase disposition technique.

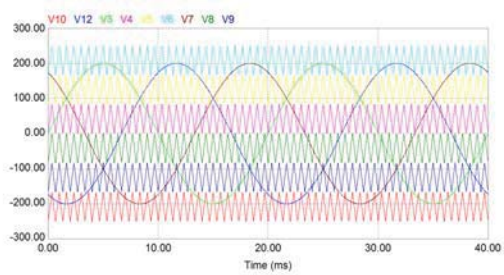

Figure3. In-phase disposition technique

Modulation Index: –

$$MI = \frac{A_m}{\left(\frac{N-1}{2}\right) * A_c}$$

N=number of Levels, A*m*=Modulation signal Amplitude, A*c*=Carrier Signal Amplitude

3.1. V/f Control Theory –

Fig 4.5 shows the relation between the voltage and torque versus frequency. The voltage and frequency being increased up to the base speed. At base speed, the voltage and frequency reach the rated values. We can drive the motor beyond base speed by increasing the frequency further. But the voltage applied cannot be increased beyond the rated voltage. Therefore, only the frequency can be increased, which results in the field weakening and the torque available being reduced. Above base speed, the factors governing torque become complex, since friction and windage losses increase significantly at higher speeds. Hence, the torque curve becomes nonlinear with respect to speed or frequency.

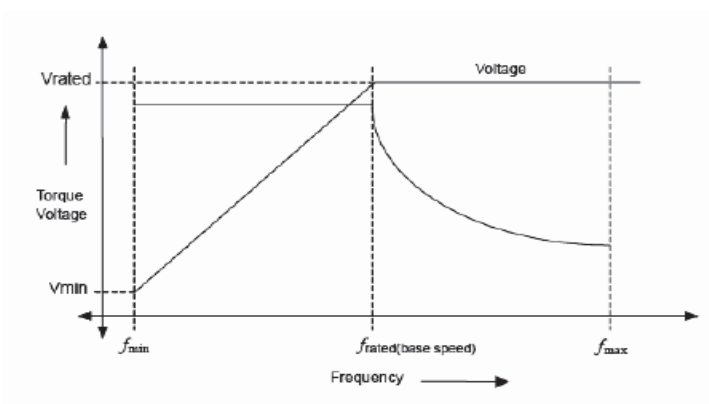

Figure 4. Speed-Torque characteristics with V/f control

3.2. Energy Saving In Variable Torque Load Application –

Many systems are used constant speed motors and control process flow rates or pressures by mechanically regulation using throttling valves, dampers, fluid couplings or variable inlet vanes etc. These devices generally do not control flow or pressure efficiently because energy is dissipated across the throttling device. Running a motor at full speed while throttling the input or output is like driving a car with one foot on the accelerator and the other on the brake; a part of the produced output immediately goes to waste. A variable speed drive can save over 60% of the energy.

Variable speed drives and the loads they are applied to can generally be divided into 3 groups

- Constant power
- Constant torque
- Variable torque

In variable torque load applications, both torque and power change with speed. Torque varies with speed squared, and power varies with speed cubed. This means that at half speed, the power required is approximately one eighth of rated maximum. Common examples of variable torque loads are centrifugal fans, blowers and variable discharge pressure pumps. The use of a variable speed drive with a variable torque load often returns significant energy savings. In these applications the drive can be used to maintain various process flows or pressures while minimizing power consumption. In addition, a drive also offers the benefits of increased process control, which often improves product quality and reduces scrap. Effective speed ranges are from 50% to 100% of maximum speed and can result in substantial energy savings.

$P = (2\pi * T * N) / 60$ ------ (1)

$T = K * N2$ ------ (2)

$P = (2\pi * K * N3) / 60$ ------ (3)

P = Power in Watts; T = Torque in N-m; N = Motor rotation speed in rpm;

A variable speed drive can also make it possible to stop a motor completely when it is not required as re-starting with a variable speed drive causes far less stress than starting direct on line - soft start is an inherent feature of the drive. Regulating the motor speed has the added benefit of easily accommodating capacity rises without extra investment, as speed increases of 5-20% is no problem with an AC variable speed drive as long as there is enough spare capacity in the system. Reduced maintenance compared to DC systems (brushes and commutators) reduced motor/application noise levels.

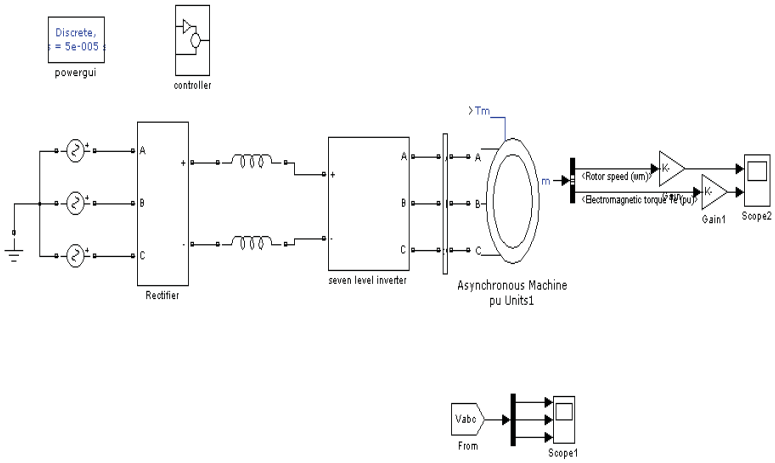

Figure5. Induction Motor Drive using Seven Level Inverter Simulation Diagram

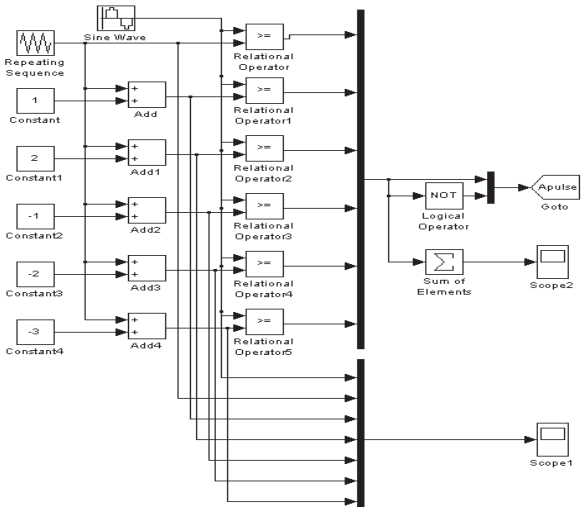

Figure6. Multi carrier SPWM simulation circuit

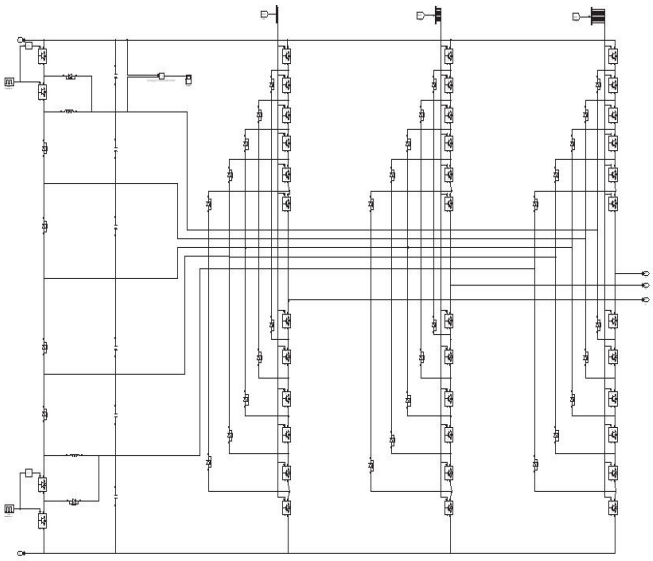

Figure 7. Seven level inverter sub circuit simulation circuit

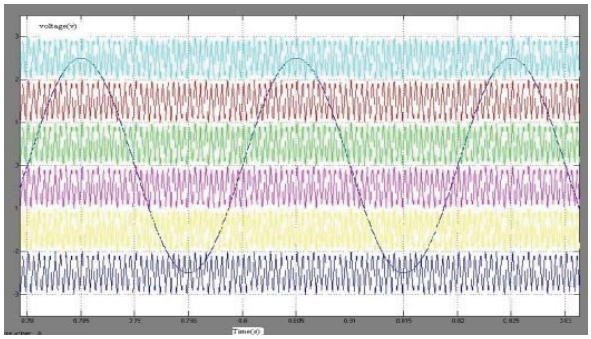

Figure8. In-phase disposition technique

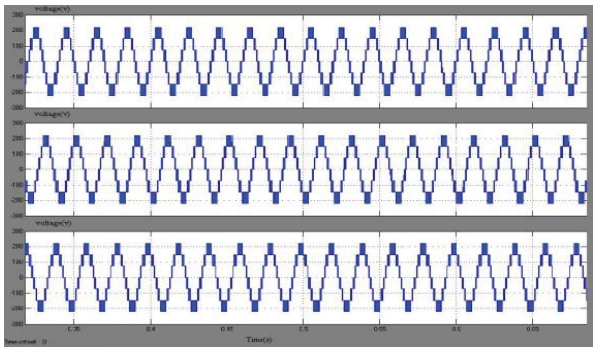

Figure9. Output Phase Voltage for 50Hz Frequency

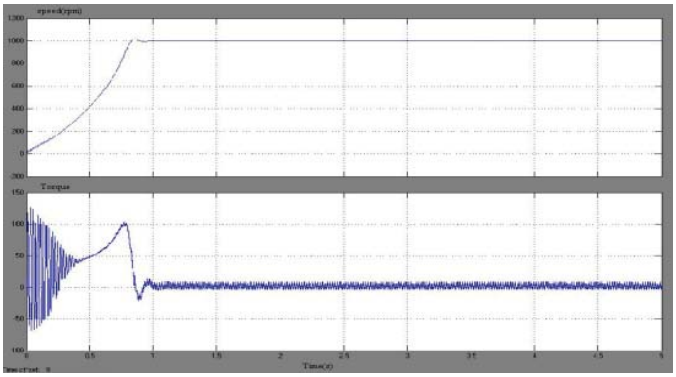

Figure 10. N-T Curves for 50Hz Frequency

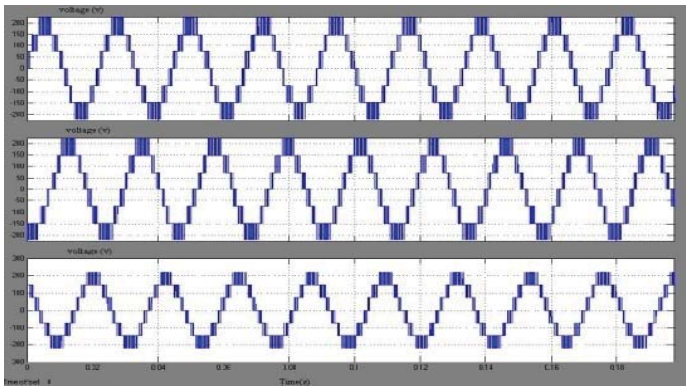

Figure 11. Output phase-phase voltage for 45Hz frequency

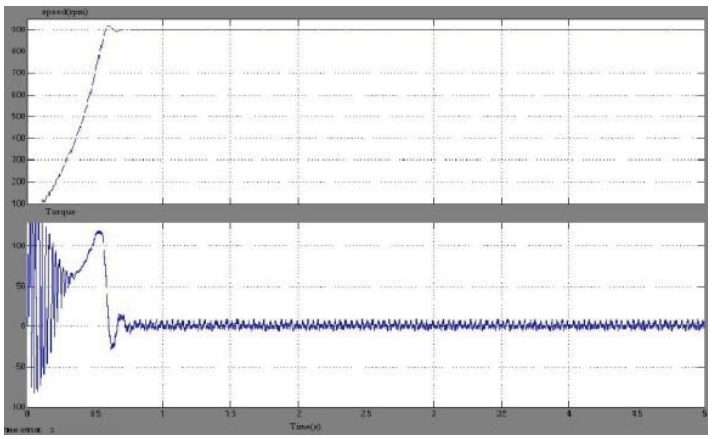

Figure 12. N-T curves for 45Hz frequency

IV.CONCLUSION

In this paper a diode clamped multilevel inverter has been presented for drive applications. The multicarrier SPWM technique can be implemented for producing low harmonic contents in the output; hence the high quality output voltage was obtained. The open loop speed control was achieved by maintaining V/f ratio at constant value. The

simulation results show that the proposed system effectively controls the motor speed and enhances the drive performance through reduction in total harmonic distortion (THD).

REFERENCES

[1] S. Malik and D. Kluge, "ACS 7000 world's first standard ac drive for Medium-voltage applications," ABB Rev., no. 2, pp. 4–11, 2006.

[2] H. Natchpong, Y. Kondo, and H. Akagi, "Five-level diode clamped PWM converters connected back-to-back for motor drives," *IEEE Trans. Ind. Appl.*, vol. 44, no. 4, pp. 1268–1276, Jul./Aug. 2008.

[3] T. S.Key and J. S. Lai, "IEEE and international harmonic standards impact on power electronic equipment design," in *Conf. Rec. IEEE IECON*, Nov.2005, vol. 2, pp. 430–436.

[4] F. DeWinter, N. Zargari, S. Rizzo, and X. Yuan, "Medium voltage drives: Are isolation transformers required?," in *Conf. Rec. IEEE IAS Petroleum Chem. Ind. Conf.*, 2002, pp. 191–196.

[5] B.Wu, *High-Power Converters and AC Drives*. Piscataway, NJ: IEEE Press, 2006.

[6] Nabae, I. Takahashi, and H. Akagi, "A new neutral-point-clamped PWM inverter," *IEEE Trans. Ind. Appl.*, vol. IA-17, no. 5, pp. 518–523,Sep. 2008.

[7] L. M. Tolbert, F. Z. Peng, and T. G. Habetler, "Multilevel converters for large electric drives," *IEEE Trans. Ind. Appl.*, vol. 35, no. 1, pp. 36– 44,Jan./Feb. 2003.