Preparation and Characterization of BRC with Different Types of Concrete

Toshi Bhavsar
M.Tech Scholar, Civil Engineering Department, SKSITS Indore, M.P., India

Abhishek Singh
Student, Civil Engineering Department, MediCaps Indore, M.P., India

Aniket Naike
Student, Civil Engineering Department, MediCaps Indore, M.P., India

Abstract- This project is an experimental work on bamboo reinforced concrete to produce low cost housing for the urban poor. In this project, bamboo is used as a reinforcement material and its strength is increased by seasoning of bamboo with following methods:

- **Resin Gum Method**
- **Oil Soaking Method**

We are able to increase the strength of bamboo from 150 N/mm2 (Unseasoned value) to an average value of 195 N/mm2 (Seasoned value). Bamboo reinforcement is used with different types of concrete for comparative study of results. We have used fly ash concrete, recycled aggregate concrete, fresh concrete, and fiber concrete.

The main aim of the project is to produce most economical, load bearing material for developing low cost houses for the urban poor. Replacing steel reinforcement will decrease the cost of the structure to a great extent.

Keywords – BRC (Bamboo Reinforced Concrete), Bamboo, Low cost housing.

I. INTRODUCTION

BAMBOO

Bamboo is one of the fastest-growing plants on Earth, with reported growth rates of 250 cm (98 in) in 24 hours. However, the growth rate is dependent on local soil and climatic conditions, as well as species, and a more typical growth rate for many commonly cultivated bamboos in temperate climates is in the range of 3–10 centimeters (1.2–3.9 in) per day during the growing period. Primarily growing in regions of warmer climates during the late Cretaceous period, vast fields existed in what is now Asia.

BAMBOO AS REINFORCEMENT

The use of bamboo as reinforcement in Portland cement concrete has been studied extensively by Clemson Agricultural College. Bamboo has been used as a construction material in certain areas for centuries, but its application as reinforcement in concrete had received little attention until the Clemson study. Ultimate strength design procedures, modified to take into account the characteristics of the bamboo reinforcement were used to estimate the ultimate load carrying capacity of the precast concrete elements with bamboo reinforcing.

Figure 1. Bamboo Culms

Figure 2. Bamboo Reinforcement

FLY-ASH CONCRETE

Flyash is defined in Cement and Concrete Terminology (ACI Committee 116) as "the finely divided residue resulting from the combustion of ground or powdered coal, which is transported from the firebox through the boiler by flue gases." Flyash is a by-product of coal-fired electric generating plants.

RECYCLED AGGREGATE CONCRETE

When structures made of concrete are demolished or renovated, **concrete recycling** is an increasingly common method of utilizing the rubble. Concrete was once routinely trucked to landfills for disposal, but recycling has a number of benefits that have made it a more attractive option in this age of greater environmental awareness, more environmental laws, and the desire to keep construction costs down.

Figure 3. Recycled Aggregates

FIBER CONCRETE

Concrete is acknowledged to be a relatively brittle material when subjected to normal stresses and impact loads, where tensile strength is only approximately one tenth of its compressive strength. As a result for these characteristics, concrete member could not support such loads and stresses that usually take place, majority on concrete beams and slabs.

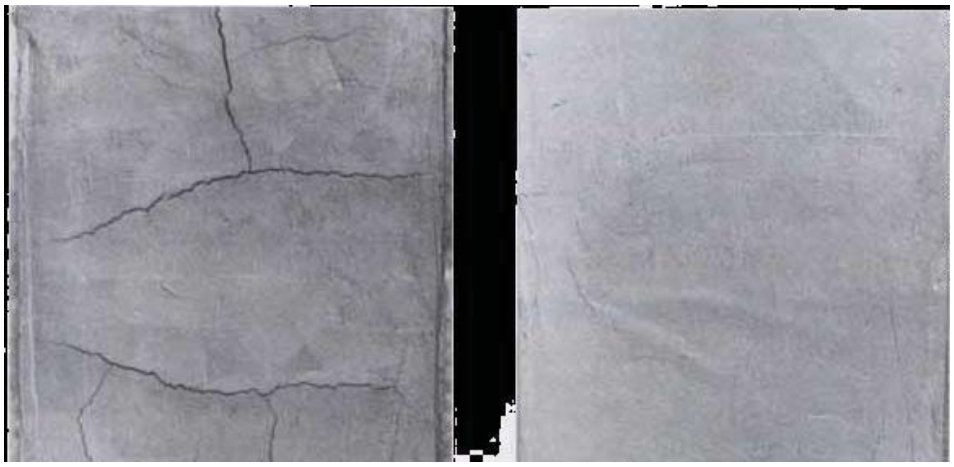

Figure 4. Normal concrete & Fiber conrete

II. METHODOLOGY

Methods of Treatment:

 Surface Application: this is done by brushing, spraying or dipping of timber in preservative solution for the required period.

 Soaking process: the debarked timber is submerged in the preservative solution for sufficient period till the desired absorption is obtained.

TENSILE TESTING OF BAMBOO

The experiments were performed on universal testing machine (Instron) under axial loading. Averages of three measurements were taken of each lamina specimens. The laminae were carefully positioned at the center of the cross-head with its end faces exactly perpendicular to the longitudinal axis to get accurate results.

WATER ABSORPTION TEST ON AGGREGATES

This test helps to determine the water absorption of coarse aggregates as per IS: 2386 (Part III) – 1963. For this test a sample not less than 2000g should be used.

Formula used in Water absorption = [(A – B)/B] x 100%.

AGGREGATE ABRASION VALUE

This test helps to determine the abrasion value of coarse aggregates as per IS: 2386 (Part IV) – 1963. The apparatus used in this test are Los Angles abrasion testing machine, IS Sieve of size – 1.7mm, Abrasive charge – 12 nos. cast iron or steel spheres approximately 48mm dia. and each weighing between 390 and 445g ensuring that the total weight of charge is 5000 +25g and Oven.

Aggregate abrasion value = (A-B)/B x 100%.

AGGREGATE CRUSHING VALUE

This test helps to determine the aggregate crushing value of coarse aggregates as per IS: 2386 (Part IV) – 1963. The apparatus used is Cylindrical measure and plunger, Compression testing machine, IS Sieves of sizes – 12.5mm, 10mm and 2.36mm

Aggregate crushing value = (B/A) x 100%.

AGGREGATE IMPACT VALUE

This test is done to determine the aggregate impact value of coarse aggregates as per IS: 2386 (Part IV) – 1963. The apparatus used for determining aggregate impact value of coarse aggregates is Impact testing machine conforming to IS: 2386 (Part IV)- 1963,IS Sieves of sizes – 12.5mm, 10mm and 2.36mm, A cylindrical metal measure of 75mm dia. and 50mm depth, A tamping rod of 10mm circular cross section and 230mm length, rounded at one end and Oven.

Aggregate impact value = (B/A) x 100%

SIEVE ANALYSIS

Sieve analysis helps to determine the particle size distribution of the coarse and fine aggregates.This is done by sieving the aggregates as per IS: 2386 (Part I) – 1963. In this we use different sieves as standardized by the IS code and then pass aggregates through them and thus collect different sized particles left over different sieves.

=

III. EXPERIMENT AND RESULT

TENSILE STRENGTH OF BAMBOO

Table for unseasoned samples

SAMPLE NO.	TENSILE STRENGTH In N/mm2
1	140
2	151
3	160

Average value of tensile strength of unseasoned bamboo samples= 150 N/mm2

Table for seasoned samples:

SAMPLE NO.	TENSILE STRENGTH In N/mm2
1	188
2	210
3	197

Average value of tensile strength of seasoned bamboo samples= 195 N/mm2

SIEVE ANALYSIS:

S.no.	Sieve (mm)	Retained weight of crush in each sieve (gram)	% retained in each sieve	% which passed each sieve	%age cumulated
1	80	0	0	100	0
2	40	200	4	96	4
3	31.5	500	10	86	14
4	20	1910	38.2	47.8	52.2
5	12.5	980	19.6	28.2	71.8
6	10	260	11.13	17.04	82.93
7	6	320	6.4	10.67	89.33
8	4.75	300	6	4.67	95.33

Fineness modulus = $(a_1 + a_2 + a_3 + a_4 + a_5 + a_6 + a_7 + a_8)/100$

= 314.1/100

= 3.141

WATER ABSORPTION:

Sr.	Determination no.	Value
1	**Wt. of saturated surface dried sample in gm (A)**	**2000**
2	**Wt. of oven dried sample in gm (B)**	**1952**

Water absorption = (A-B)/B*100

= 48*100/1952

=2.45%

RESULTS AND CALCULATIONS OF BEAM SAMPLES

Table for fresh concrete beam with mild steel reinforcement (6 mm bars):

SAMPLE NO.	LOAD TAKEN In kN
1	7
2	9
3	11

Average value of load for fresh concrete beam with mild steel reinforcement samples= 9 KN

Table for Fly ash concrete with bamboo reinforcement

SAMPLE NO.	LOAD TAKEN In kN
1	5
2	8
3	5

Average value of Fly ash concrete with bamboo reinforcement sample= 6 KN

Table for Fiber concrete with bamboo reinforcement

SAMPLE NO.	LOAD TAKEN In kN
1	10
2	10
3	13

Average value of Fiber concrete with bamboo reinforcement sample= 11 KN

Table for Recycled aggregate concrete with bamboo reinforcement

SAMPLE NO.	LOAD TAKEN In KN
1	11
2	12
3	13

Average value of Recycled aggregate concrete with bamboo reinforcement sample= 12 KN

Calculation:

Calculation of flexural strength is done by the following equation:

$$\frac{M}{I} = \frac{f}{y}$$

Fresh concrete with mild steel reinforcement:

Load =9 KN

Shear force and bending moment dig. For the beam is:

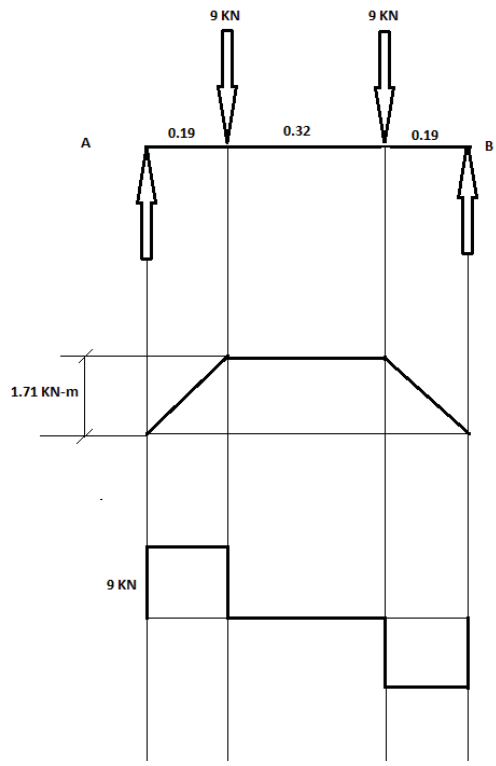

By using the equation, we get,
M= 1.71 x 10^6 N-mm
I= (150x150^3) / 12
Y= 150/2 = 75 mm
 f = (M x y)/ I

f = (1.71 x 106 N-mm x 75 mm)/((150x150^3) / 12)
 f = 3.04 N/mm^2

Flexural strength of the beam is coming 3.04 N/mm^2
Now by using the relation,
f= 0.7 $(fck)^{0.5}$
 fck= 18.86 N/mm^2

Fly ash concrete with bamboo reinforcement:

Load =8 KN

Shear force and bending moment dig. For the beam is:

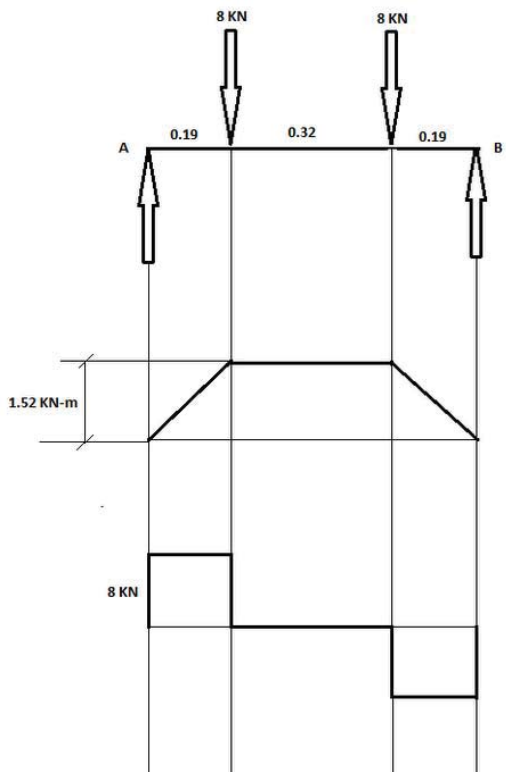

By using the equation, we get,
M= 1.52 x 10^6 N-mm
I= $(150x150^3) / 12$
Y= 150/2 = 75 mm
⇨ f = (M x y)/ I

⇨ f = (1.52 x 10^6 N-mm x 75 mm)/($(150x150^3) / 12$)

⇨ f = 2.70 N/mm^2
Flexural strength of the beam is coming 2.70 N/mm^2
Now by using the relation,
f= 0.7 $(f_{ck})^{0.5}$
⇨ f_{ck}= 14.90 N/mm^2

Fiber concrete with bamboo reinforcement:

Load =11 KN
Shear force and bending moment dig. For the beam is:

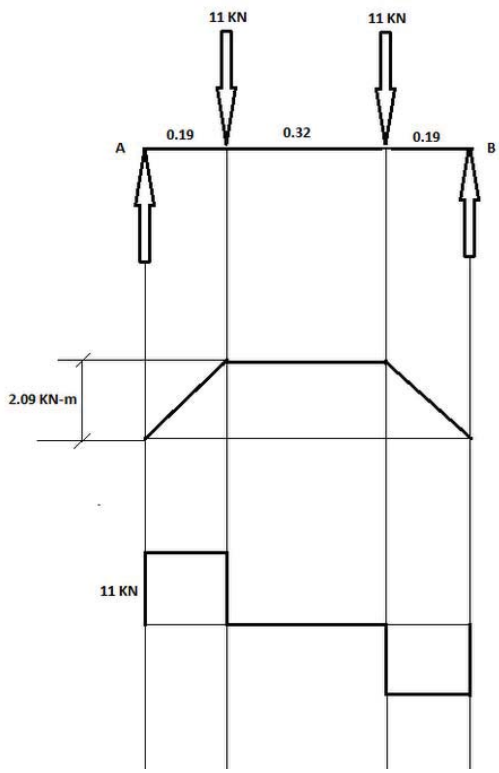

By using the equation, we get,
M= 2.09 x 10^6 N-mm
I= (150x150^3) / 12
Y= 150/2 = 75 mm
⇨ f = (M x y)/ I

f = (2.09 x 10^6 N-mm x 75 mm)/((150x150^3) / 12)
⇨ f = 3.71 N/mm^2

Flexural strength of the beam is coming 3.71 N/mm^2
Now by using the relation,
f= 0.7 $(f_{ck})^{0.5}$
⇨ f_{ck}= 28.09 N/mm^2

Recycled Aggregate concrete with bamboo reinforcement:

Load =12 KN

Shear force and bending moment dig. For the beam is:

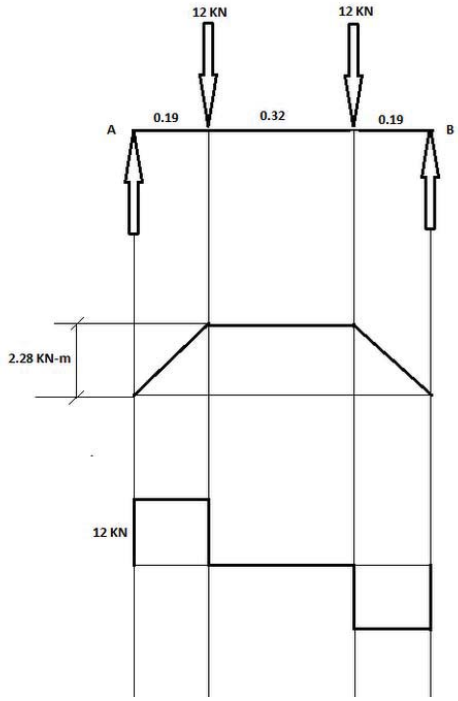

By using the equation, we get,
M= 2.28 x 10^6 N-mm
I= (150x150^3) / 12
Y= 150/2 = 75 mm
⇨ f = (M x y)/ I

f = (2.28 x 10^6 N-mm x 75 mm)/((150x150^3) / 12)

⇨ f = 4.05 N/mm^2
Flexural strength of the beam is coming 4.05 N/mm^2
Now by using the relation,
f= 0.7 $(f_{ck})^{0.5}$
⇨ f_{ck}= 33.47 N/mm^2

Figure 5. Testing of beam

IV.CONCLUSION

This project is work for studying the possibility of replacing the steel with bamboo reinforcement with different types of concrete for constructing low cost housing for urban poor. From the above experimental results it can be seen that Fresh concrete with mild steel reinforcement has greater strength than fly ash concrete with bamboo reinforcement but lesser strength than fiber concrete with bamboo reinforcement. Also the recycled aggregate concrete with bamboo reinforcement posses the maximum strength of all above concrete. This shows that steel can be replaced by bamboo thus providing more economical alternative for construction of various structures. Fly ash concrete with bamboo reinforcement posses the lowest strength of all above based on the 28 days curing results, but it takes more time to attain is full strength. Hence further study is required to investigate the behaviour and full strength of fly ash concrete with bamboo reinforcement. This thesis concludes that bamboo can be used as reinforcement for constructing low cost house and structures.

The study of this project and experiments performed in laboratories gives us a satisfactory result, but it's not right to say that steel can be replaced effectively as till now we have studied bamboo reinforcement in beam members only.

So, we recommend that further more study and advanced experiments are required before using bamboo as a reinforced material.

REFERENCES

[1] Prof. Satish Pawar; Bamboo in Construction Technology; Advance in Electronic and Electric Engineering; ISSN 2231-1297, Volume 4, Number 4 (2014), pp. 347-352 © Research India Publications

[2] I.K. Khan; PERFORMANCE OF BAMBOO REINFORCED CONCRETE BEAM; International Journal of Science, Environment and Technology, Vol. 3, No 3, 2014, 836 – 840; ISSN 2278-3687 (O)

[3] Chandra. Sabnani, Madhuwanti. Latkar and Utpal. Sharma; Can Bamboo Replace Steel as Reinforcement in Concrete, for the key Structural Elements in a Low Cost House, Designed for the Urban Poor?; International Journal of Chemical, Environmental & Biological Sciences (IJCEBS) Volume 1, Issue 2 (2013) ISSN 2320 –4087 (Online)

[4] Jigar K. Sevalia, Nirav B. Siddhpura, Chetan S. Agrawal, Deep B. Shah, Jai V. Kapadia; Study on Bamboo as Reinforcement in Cement Concrete; International Journal of Engineering Research and Applications (IJERA) ISSN: 2248-9622 www.ijera.com Vol. 3, Issue 2, March -April 2013, pp.1181-1190

[5] Adom-Asamoah Mark, Afrifa Owusu Russell; A comparative study of Bamboo reinforced concrete beams using different stirrup materials for rural construction; INTERNATIONAL JOURNAL OF CIVIL AND STRUCTURAL ENGINEERING Volume 2, No 1, 2011; Research article ISSN 0976 – 4399

[6] Nirav B. Siddhpuraa, Deep B. Shaha, Jai V. Kapadiaa, Chetan S. Agrawala and Jigar K. Sevaliaa; Experimental Study on Flexural Element using Bamboo as Reinforcement; International Journal of Current Engineering and Technology ISSN 2277 - 4106 © 2013 INPRESSCO

[7] Dr. Patel Pratima A, Patel Jaymin A, Magdallawala Sunny H, Maiwala Adit R, Gajera Vivek J; Design of bamboo reinforced concrete water tank resting over firm ground; International Association of Scientific Innovation and Research (IASIR) *(An Association Unifying the Sciences, Engineering, and Applied Research)* ISSN (Print): 2279-0020, ISSN (Online): 2279-0039

[8] Sreemathi iyer; Guidelines for building bamboo-reinforced masonry in earthquake-prone areas in india; A thesis presented to the faculty of the school of architecture university of southern california in partial fulfillment of the requirements of the degree, masters of building science, may 2002

[9] Abang Abdullah Abang Ali; Development of Basic Mechanical Tests for Malaysian Bamboos; Pertanika 7(2),13-17 (1984)

[10] Masakazu Terai & Koichi Minami; Research and Development on Bamboo Reinforced Concrete Structure Fukuyama University, Japan

[11] Dinesh Bhonde, P. B. Nagarnaik, D. K. Parbat, U. P. Waghe; Experimental Investigation of Bamboo Reinforced Concrete Slab; American Journal of Engineering Research (AJER) e-ISSN: 2320-0847 p-ISSN: 2320-0936 Volume-03, Issue-01, pp-128-131
[12] Arpit Sethia, Vijay Baradiya; Experimental Investigation on Behavior of Bamboo Reinforced Concrete Member; IJRET: International Journal of Research in Engineering and Technology eISSN: 2319-1163 | pISSN: 2321-7308